YAMAHA

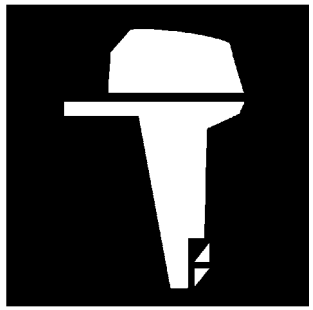

PARTS CATALOGUE
CATALOGUE DE PIECES DETACHEES

RIGGING-METER

1H602-30MF1

( )

YAMAHA GENUINE Parts & Accessories

RIGGING-METER
PARTS CATALOGUE
©2009 by Yamaha Motor Co., Ltd.
1st edition, April 2009
All rights reserved.
Any reprinting or unauthorized use
without the written permission of
Yamaha Motor Co., Ltd.
is expressly prohibited.
Printed in Japan.

RIGGING-METER
CATALOGUE DE PIECES DETACHEES
©2009 par Yamaha Motor Co., Ltd.
1re édition, avril 2009
Tous droits réservés
Toute réimpression ou utilisation
non autorisée sans la permission écrite
de la Yamaha Motor Co., Ltd.
est formellement interdite.
Imprimé au Japon

FOREWORD

This Parts Catalogue is related to the parts for the model(s) on the cover page. When you are ordering replacement parts, please refer to this Parts Catalogue and quote both part numbers and part names correctly.

1. Modifications or additions which have been made after the issue of the Parts Catalogue will be announced in the Parts News.
   It is advisable that you make the necessary corrections to the Parts Catalogue according to the Parts News.

2. Abbreviations
   The following abbreviations are used in this Parts Catalogue.

   “UR” Use specified parts number.
   “UN” Use as many as needed.
   “AP” Alternate Parts
   “LM” Locally Made (Parts need to be ordered locally)
   “F#” Frame No. (Applicable machine No.)
   “O/S” Over Size

3. The number of components for assembly
   - Parts, which are to be supplied in an assembly, are listed with a dot (.) in front of the part name as shown below.
   - The numeral appearing to the right of each component part indicates the quantity of parts for each assembly unit.

PART NO.	DESCRIPTION	Q’TY	REMARKS
2F5–83310–60	FRONT FLASHER LIGHT ASSY	2	
115–83311–60	.BULB (6V–18W)	1	

4. Applicable colours of graphics are represented in the “REMARKS” as shown below.

PART NO.	DESCRIPTION	Q’TY	REMARKS
2N4–24110–00–X5	FUEL TANK COMP.	2	MXR
3J1–24240–10	.GRAPHIC, FUEL TANK	1	FOR MXR

5. Note that the illustrations for reference in finding parts numbers are not to be used for assembling. When assembling, please use the applicable service manual.

6. The asterisk (*) before a reference number indicates modified items after the first edition.

AVANT–PROPOS

Ce catalogue de pièces détachées concerne les pièces pour le(s) modèle(s) indiqué(s) sur la page de couverture. Lorsque vous commandez des pièces de rechange, veuillez vous référer à ce catalogue de pieces détachées et indiquer clairement les numéros et les noms des pièces détachées.

1. Les modifications ou ajouts ayant été effectués après la parution du catalogue de pièces détachées seront décrits dans les Bulletins d'information concernant les pièces détachées.
   Il est recommandé que vous apportiez les corrections nécessaires au catalogue des pièces détachées en vous référant aux Bulletins d'information.

2. Abréviations
   Dans ce catalogue, les abréviations suivantes sont utilisées:

   "UR" Utiliser le numéro de pièces spécifié.
   "UN" Utiliser autant que nécessaire.
   "AP" Pièces de substitution
   "LM" Fabrication locale (les pièces doivent être commandées localement.)
   "F#" N° de cadre (applicable au N° de série)
   "O/S" Surdimensionné

3. Nombre de pièces d'un assemblage
   - Les pièces fournies comme composants d'un assemblage sont précédées d'un point (.) de la manière indiquée ci–dessous.
   - Le chiffre apparaissant à la droite de chaque composant indique la quantité de pièces pour chaque unité d'assemblage.

N° PIECES	DESCRIPTION	QTE	REMARQUES
2F5–83310–60	ENS. CLIGNOTANT AVANT	2	
115–83311–60	.AMPOULE (6V–18W)	1	

4. Les couleurs concernant les graphiques sont indiquées dans la colonne "REMARQUES", comme indiqué ci–dessous.

N° PIECES	DESCRIPTION	QTE	REMARQUES
2N4–24110–00–X5	RESERVOIR A ESSENCE.	2	MXR
3J1–24240–10	.GRAPHIQUE	1	POUR MXR

5. Veuillez noter que les illustrations sont indiquées à titre de référence pour trouver les numéros de pièces, non pour être utilisées lors de l'assemblage. Lors de l'assemblage, veuillez utiliser le manuel d'entretien adéquat.

6. L'astérisque (*) placé devant un numéro de référence indique des éléments qui ont été modifiés après la première édition.

CONTENTS

METER 1 1
METER 2 2
METER 3 4
METER 4 5
METER 5 6
METER 6 7
METER 7 8
METER 8 9
WIRE HARNESS 1 10
WIRE HARNESS 2 11
ELECTRICAL 13
DIGITAL NETWORK GAUGE 1 14
DIGITAL NETWORK GAUGE 2 15
DIGITAL NETWORK GAUGE 3 17
DIGITAL NETWORK GAUGE 4 18
DIGITAL NETWORK GAUGE 5 19
DIGITAL NETWORK GAUGE 6 20
DIGITAL NETWORK GAUGE 7 21

INDEX

NUMERICAL INDEX 22

TABLE DES MATIERES

COMPTEUR 1 1
COMPTEUR 2 2
COMPTEUR 3 4
COMPTEUR 4 5
COMPTEUR 5 6
COMPTEUR 6 7
COMPTEUR 7 8
COMPTEUR 8 9
FAISCEAU DE FILS 1 10
FAISCEAU DE FILS 2 11
PARTIE ELECTRIQUE 13
DIGITAL RESEAU JAUGE 1 14
DIGITAL RESEAU JAUGE 2 15
DIGITAL RESEAU JAUGE 3 17
DIGITAL RESEAU JAUGE 4 18
DIGITAL RESEAU JAUGE 5 19
DIGITAL RESEAU JAUGE 6 20
DIGITAL RESEAU JAUGE 7 21

INDEX

INDEX NUMERIQUE 22

DIGITAL TACHOMETER

Ref. No.	Description	Part No.	Applicable model
1	Multifunction	6Y5-8350T-03	250G,L250G
2	Multifunction w/o "Check engine" and "Water in fuel" indicators	6Y5-8350T-90	40 (3-cyl)-300 w/ oil injection, PTT (except 250G/L250G), F30-F250 [6P2] w/ PTT

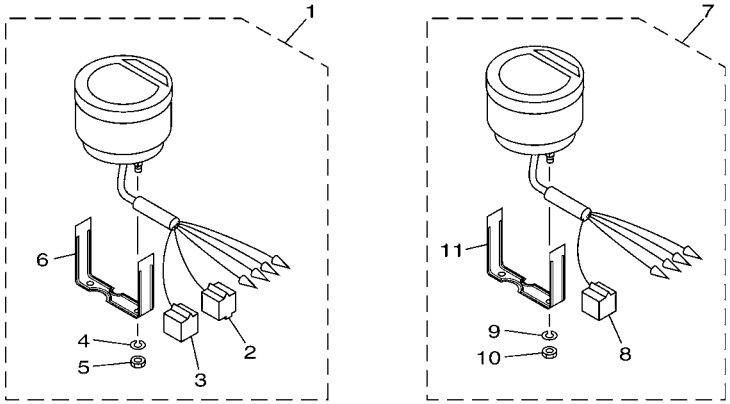

601M10M-H010

FIG. 1 METER 1 COMPTEUR 1

REF. NO.	PART NO. N° PIECES	DESCRIPTION DESCRIPTION	602M					REMARKS REMARQUES
1	6Y5–8350T–03	DIGITAL TACHOMETER ASSY COMPTE-TOURS NUMERIQUE CPLT	1					
2	9E450–04433	.CONNECTOR .CONNECTEUR	1					M-4-W M-4-W
3	9E450–04533	.CONNECTOR .CONNECTEUR	1					F-4-W F-4-W
4	92990–04100	.WASHER, SPRING .RONDELLE, GROWER	2					
5	95380–04600	.NUT .ECROU	2					
6	6Y5–8355X–T1	.BRACKET, METER 1 .CROCHET, COMPTEUR	1					
7	6Y5–8350T–90	DIGITAL TACHOMETER ASSY COMPTE-TOURS NUMERIQUE CPLT	1					
8	9E450–04533	.CONNECTOR .CONNECTEUR	1					F-4-W F-4-W
9	92990–04100	.WASHER, SPRING .RONDELLE, GROWER	2					
10	95380–04600	.NUT .ECROU	2					
11	6Y5–8355X–T1	.BRACKET, METER 1 .CROCHET, COMPTEUR	1					

ANALOG TACHOMETER

Ref. No.	Description	Part No.	Applicable model
1	Without indicators BLK panel	6Y7-83540-20	Pre-mixed 9.9-225 F9.9-F25, and FT8 (T8)
	Without indicators WHT panel	6Y7-83540-30	
8	With 3 oil indicators BLK panel	6Y7-83540-00	250G, L250G
	With 3 oil indicators WHT panel	6Y7-83540-10	
17	With overheat & oil indicators BLK panel	6Y7-83540-80	40 (3-cyl)-300 w/ oil injection (except 250G/ L250G) F30-F250 [6P2]
	With overheat & oil indicators WHT panel	6Y7-83540-90	

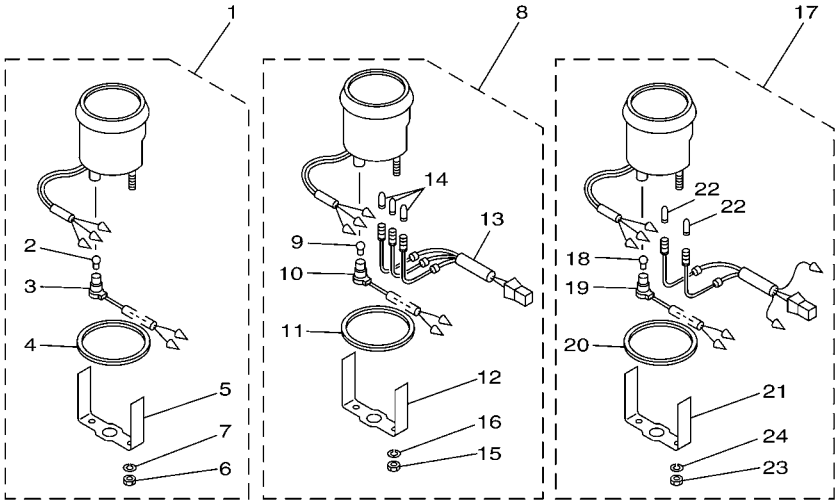

601M10M-H020

FIG. 2 METER 2 COMPTEUR 2

REF. NO.	PART NO. N° PIECES	DESCRIPTION DESCRIPTION	602M					REMARKS REMARQUES
1	6Y7–83540–20	TACHOMETER ASSY COMPTE-TOURS CPLT	1					UR WITHOUT OIL LAMP UR WITHOUT OIL LAMP
	6Y7–83540–30	TACHOMETER ASSY COMPTE-TOURS CPLT	1					UR WITHOUT OIL LAMP UR WITHOUT OIL LAMP
2	6Y5–83517–00	.BULB (T10, 12V-1.7W) .AMPOULE (T10, 12V-1.7W)	1					
3	6Y5–83536–40	.SOCKET, METER .DOUILLE, COMPTEUR	1					FOR 6Y7-83540-20 FOR 6Y7-83540-20
	6Y5–83536–10	.SOCKET, METER .DOUILLE, COMPTEUR	1					FOR 6Y7-83540-30 FOR 6Y7-83540-30
4	6Y5–83523–00	.DAMPER .AMORTISSEUR	1					
5	6Y5–83514–00	.PLATE, FITTING .PLAQUE, FIXATION	1					
6	95380–05600	.NUT .ECROU	2					
7	92990–05100	.WASHER, SPRING .RONDELLE, GROWER	2					
8	6Y7–83540–00	TACHOMETER ASSY COMPTE-TOURS CPLT	1					UR WITH OIL LAMP UR WITH OIL LAMP
	6Y7–83540–10	TACHOMETER ASSY COMPTE-TOURS CPLT	1					UR WITH OIL LAMP UR WITH OIL LAMP
9	6Y5–83517–00	.BULB (T10, 12V-1.7W) .AMPOULE (T10, 12V-1.7W)	1					
10	6Y5–83536–40	.SOCKET, METER .DOUILLE, COMPTEUR	1					
11	6Y5–83523–00	.DAMPER .AMORTISSEUR	1					
12	6Y5–83514–00	.PLATE, FITTING .PLAQUE, FIXATION	1					
13	6Y5–83509–03	.SOCKET CORD ASSY .CORDON DE FIL CPLT	1					
14	6Y5–83518–00	.BULB (12V-1.7W T6.5) .AMPOULE (12V-1.7W T6.5)	3					
15	95303–05600	.NUT .ECROU	2					
16	92903–05100	.WASHER, SPRING .RONDELLE, GROWER	2					
17	6Y7–83540–80	TACHOMETER ASSY COMPTE-TOURS CPLT	1					UR WITH OIL/TEMP LAMP UR WITH OIL/TEMP LAMP
	6Y7–83540–90	TACHOMETER ASSY COMPTE-TOURS CPLT	1					UR WITH OIL/TEMP LAMP UR WITH OIL/TEMP LAMP
18	6Y5–83517–00	.BULB (T10, 12V-1.7W) .AMPOULE (T10, 12V-1.7W)	1					
19	6Y5–83536–40	.SOCKET, METER .DOUILLE, COMPTEUR	1					
20	6Y5–83523–00	.DAMPER .AMORTISSEUR	1					
21	6Y5–83514–00	.PLATE, FITTING .PLAQUE, FIXATION	1					
22	6Y5–83518–00	.BULB (12V-1.7W T6.5) .AMPOULE (12V-1.7W T6.5)	2					
23	95380–05600	.NUT .ECROU	2					

ANALOG TACHOMETER

Ref. No.	Description	Part No.	Applicable model
1	Without indicators BLK panel	6Y7-83540-20	Pre-mixed 9.9-225 F9.9-F25, and FT8 (T8)
	Without indicators WHT panel	6Y7-83540-30	
8	With 3 oil indicators BLK panel	6Y7-83540-00	250G, L250G
	With 3 oil indicators WHT panel	6Y7-83540-10	
17	With overheat & oil indicators BLK panel	6Y7-83540-80	40 (3-cyl)-300 w/ oil injection (except 250G/ L250G) F30-F250 [6P2]
	With overheat & oil indicators WHT panel	6Y7-83540-90	

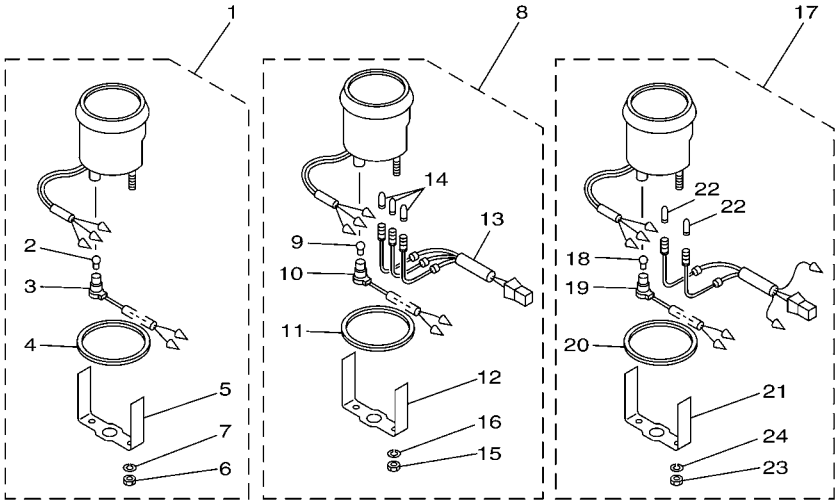

601M10M-H020

FIG. 2 METER 2 **COMPTEUR 2**

REF. NO.	PART NO. N° PIECES	DESCRIPTION DESCRIPTION	602M					REMARKS REMARQUES
24	92990–05100	.WASHER, SPRING .RONDELLE, GROWER	2					

DIGITAL SPEEDOMETER

Ref. No.	Description	Part No.	Applicable model
1	Digital multifunction	6Y5-83570-S5	40 (3-cyl)-300 F30-F250 [6P2]
10		6Y5-83500-30	For Yamaha manufactured boats (Japan)

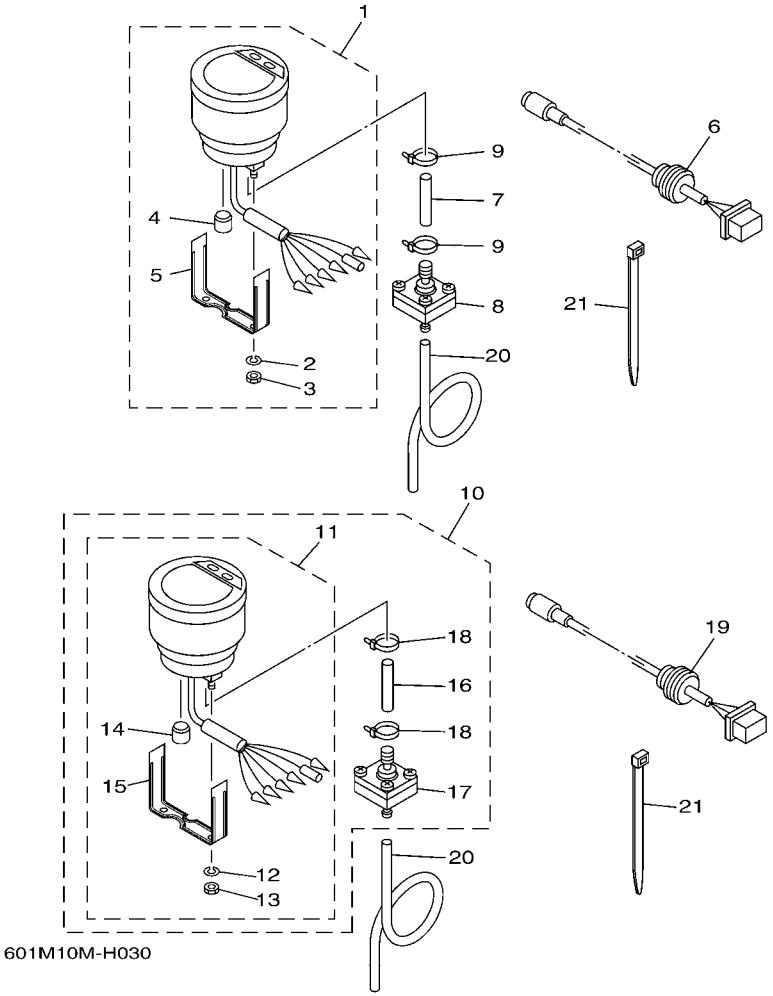

FIG. 3 METER 3 — COMPTEUR 3

REF. NO.	PART NO. N° PIECES	DESCRIPTION DESCRIPTION	602M					REMARKS REMARQUES
1	6Y5–83570–S5	SPEEDOMETER ASSY COMPTEUR DE VITESSE CPLT	1					
2	92990–04100	.WASHER, SPRING .RONDELLE, GROWER	2					
3	95380–04600	.NUT .ECROU	2					
4	6Y5–83533–T2	.GROMMET .RONDELLE CAOUTCHOUC	1					
5	6Y5–8355X–T1	.BRACKET, METER 1 .CROCHET, COMPTEUR	1					
6	6Y5–87122–S0	CORD ASSY 1 CORDON COMPLET 1	1					AP AP
7	6Y5–83557–31	TUBE TUBE	1					
8	6Y5–83728–00	CONNECTOR ASSY CONNEXION COMPLET	1					
9	90465–11M10	CLAMP BRIDE	2					
10	6Y5–83500–30	METER ASSY COMPTEUR COMPLET	1					
11	6Y5–83570–30	.SPEEDOMETER ASSY .COMPTEUR DE VITESSE CPLT	1					
12	92990–04100	..WASHER, SPRING ..RONDELLE, GROWER	2					
13	95380–04600	..NUT ..ECROU	2					
14	6Y5–83533–T2	..GROMMET ..RONDELLE CAOUTCHOUC	1					
15	6Y5–8355X–T1	..BRACKET, METER 1 ..CROCHET, COMPTEUR	1					
16	6Y5–83557–31	.TUBE .TUBE	1					
17	6Y5–83728–00	.CONNECTOR ASSY .CONNEXION COMPLET	1					
18	90465–11M10	.CLAMP .BRIDE	2					
19	6Y5–87122–S0	CORD ASSY 1 CORDON COMPLET 1	1					AP AP
20	6Y5–83557–00	TUBE (6M) TUBE (6M)	1					
21	90465–11M10	CLAMP BRIDE	2					

ANALOG SPEEDOMETER

Description	Part No.	Applicable model
Analog, BLK panel 0 – 75 mph (20 – 120 km/h)	6Y7-83510-00	40 (3-cyl)-300 F30-F250 [6P2]
Analog, WHT panel 0 – 75 mph (20 – 120 km/h)	6Y7-83510-10	
Analog, BLK panel 0 – 50 mph (20 – 80 km/h)	6Y7-83510-20	
Analog, WHT panel 0 – 50 mph (20 – 80 km/h)	6Y7-83510-30	
Analog, BLK panel 0 – 120 km/h (15 – 65 knot)	6Y7-83510-40	
Analog, WHT panel 0 – 120 km/h (15 – 65 knot)	6Y7-83510-50	
Analog, BLK panel 0 – 80 km/h (10 – 43 knot)	6Y7-83510-60	
Analog, WHT panel 0 – 80 km/h (10 – 43 knot)	6Y7-83510-70	

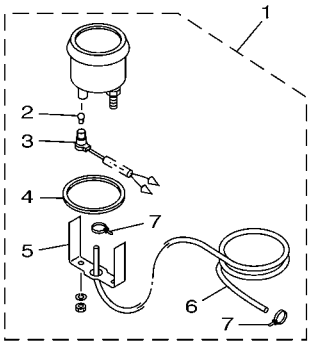

601M10M-H040

FIG. 4 METER 4 COMPTEUR 4

REF. NO.	PART NO. N° PIECES	DESCRIPTION DESCRIPTION	602M					REMARKS REMARQUES
1	6Y7–83510–00	SPEEDOMETER ASSY (75MPH) COMPTEUR DE VITESSE (75MPH)	1					UR UR
	6Y7–83510–10	SPEEDOMETER ASSY (75MPH) COMPTEUR DE VITESSE (75MPH)	1					UR UR
	6Y7–83510–20	SPEEDOMETER ASSY (50MPH) COMPTEUR DE VITESSE (50MPH)	1					UR UR
	6Y7–83510–30	SPEEDOMETER ASSY (50MPH) COMPTEUR DE VITESSE (50MPH)	1					UR UR
	6Y7–83510–40	SPEEDOMETER ASSY (120KM/H) COMPTEUR DE VITESSE (120KM/H)	1					UR UR
	6Y7–83510–50	SPEEDOMETER ASSY (120KM/H) COMPTEUR DE VITESSE (120KM/H)	1					UR UR
	6Y7–83510–60	SPEEDOMETER ASSY (80KM/H) COMPTEUR DE VITESSE (80KM/H)	1					UR UR
	6Y7–83510–70	SPEEDOMETER ASSY (80KM/H) COMPTEUR DE VITESSE (80KM/H)	1					UR UR
2	6Y5–83517–00	.BULB (T10, 12V-1.7W) .AMPOULE (T10, 12V-1.7W)	1					
3	6Y5–83536–40	.SOCKET, METER .DOUILLE, COMPTEUR	1					
4	6Y5–83523–00	.DAMPER .AMORTISSEUR	1					
5	6Y5–83514–00	.PLATE, FITTING .PLAQUE, FIXATION	1					
6	688–83557–00	.TUBE .TUBE	1					
7	90465–11M10	.CLAMP .BRIDE	2					

FUEL MANAGEMENT GAUGE

Ref. No.	Description	Part No.	Applicable model
1	Fuel mgt gauge kit 1 For single-engine	6Y5-W0088-54	115-300 F115-F250 [6P2]
	Fuel mgt gauge kit 2 For twin-engine	6Y5-W0088-65	
12	Fuel mgt gauge with speedometer	6Y5-83500-40	

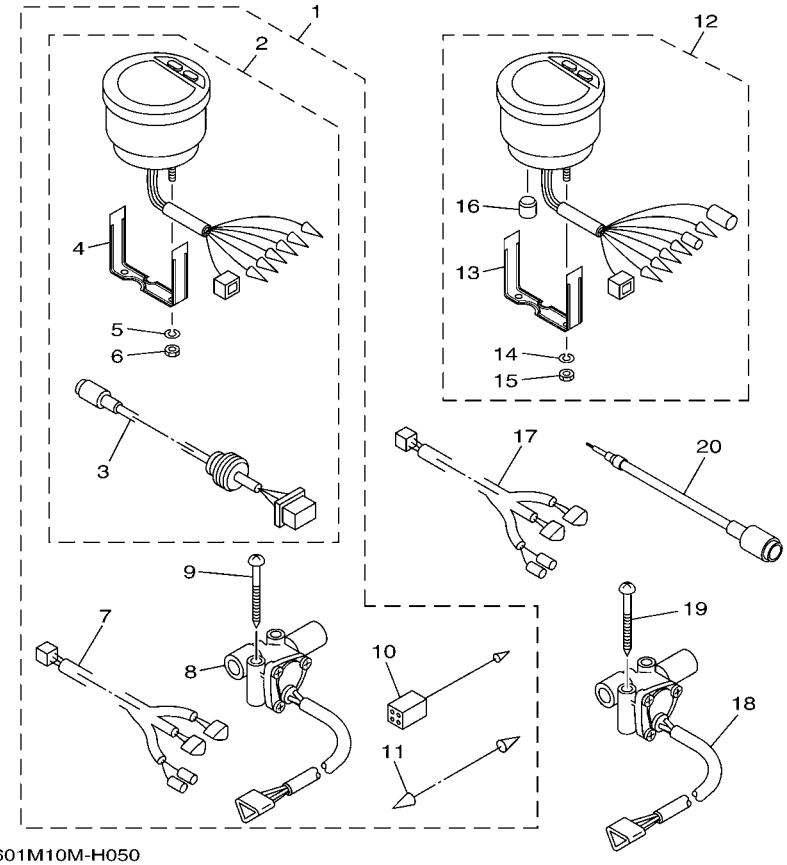

601M10M-H050

FIG. 5 METER 5 COMPTEUR 5

REF. NO.	PART NO. N° PIECES	DESCRIPTION DESCRIPTION	602M					REMARKS REMARQUES
1	6Y5–W0088–54	DIGITAL FUEL METER KIT(SINGLE) KIT DE LAMPE TEMOIN	1					UR UR
	6Y5–W0088–65	DIGITAL FUEL METER KIT (TWIN) KIT DE LAMPE TEMOIN	1					UR UR
2	6Y5–83500–F2	.FUEL MANAGEMENT METER .COMPT. DE GESTION DU CARBURANT	1					
3	6Y5–87122–S0	..CORD ASSY 1 ..CORDON COMPLET 1	1					
4	6Y5–8355X–T1	..BRACKET, METER 1 ..CROCHET, COMPTEUR	1					
5	92990–04100	..WASHER, SPRING ..RONDELLE, GROWER	2					
6	95380–04600	..NUT ..ECROU	2					
7	6Y5–83553–F1	.WIRE, LEAD (L=8.0M) .FIL (L=8.0M)	1					
8	6Y5–85752–02	.SENDER UNIT ASSY, FUEL METER .PERCEPTION DE JAUGE A ESSENCE	1					FOR 6Y5-W0088-54 FOR 6Y5-W0088-54
	6Y5–85752–02	.SENDER UNIT ASSY, FUEL METER .PERCEPTION DE JAUGE A ESSENCE	2					FOR 6Y5-W0088-65 FOR 6Y5-W0088-65
9	90158–06003	.SCREW, WOOD .VIS, A BOIS	2					FOR 6Y5-W0088-54 FOR 6Y5-W0088-54
	90158–06003	.SCREW, WOOD .VIS, A BOIS	4					FOR 6Y5-W0088-65 FOR 6Y5-W0088-65
10	6Y5–82117–00	.WIRE, LEAD (BLACK) (L300) .FIL (NOIR) (L300)	1					
11	703–82531–00	.WIRE, LEAD (L70) .FIL (L70)	1					FOR 6Y5-W0088-65 FOR 6Y5-W0088-65
12	6Y5–83500–40	METER ASSY COMPTEUR COMPLET	1					
13	6Y5–8355X–T1	.BRACKET, METER 1 .CROCHET, COMPTEUR	1					
14	92990–04100	.WASHER, SPRING .RONDELLE, GROWER	2					
15	95380–04600	.NUT .ECROU	2					
16	6Y5–83533–T2	.GROMMET .RONDELLE CAOUTCHOUC	1					
17	6Y5–83553–F1	WIRE, LEAD (L=8.0M) FIL (L=8.0M)	1					
18	6Y5–85752–02	SENDER UNIT ASSY, FUEL METER PERCEPTION DE JAUGE A ESSENCE	1					
19	90158–06003	SCREW, WOOD VIS, A BOIS	2					
20	6Y5–85721–F0	WIRE, LEAD FIL, SECONDAIRE	1					

ANALOG TRIM METER

Description	Part No.	Applicable model
4-pin coupler BLK panel	6Y7-83670-00	Premixed 40 (3-cyl)-225 w/ PTT, 250G, L250G
Bullet connector BLK panel	6Y7-83670-40	40 (3-cyl)-300 w/ oil injection, PTT (except 250G & L250G), F30-F250 [6P2] w/ PTT Using as a set with tachometer, 6Y7-83540-80
4-pin coupler WHT panel	6Y7-83670-20	Premixed 40 (3-cyl)-225 w/ PTT, 250G, L250G
Bullet connector WHT panel	6Y7-83670-50	40 (3-cyl)-300 w/ oil injection, PTT (except 250G & L250G), F30-F250 [6P2] w/ PTT Using as a set with tachometer, 6Y7-83540-90

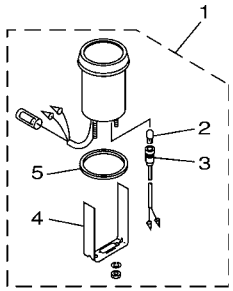

COOLANT PRESSURE METER

Description	Part No.	Applicable model
kPa, Black panel	6Y7-83660-00	40 [3-cyl] – 300 F20 [65P] – F250 [6P2]
kPa, White panel	6Y7-83660-20	
psi, Black panel	6Y7-83660-10	
psi, White panel	6Y7-83660-30	

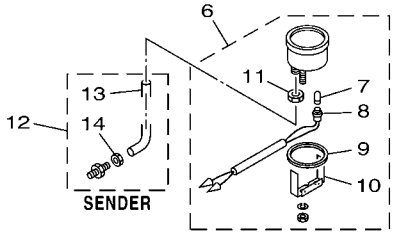

601M10M-H060

FIG. 6 METER 6 COMPTEUR 6

REF. NO.	PART NO. N° PIECES	DESCRIPTION DESCRIPTION	602M					REMARKS REMARQUES
1	6Y7–83670–00	TRIM METER ASSY. INCLINER-METRE	1					UR UR
	6Y7–83670–40	TRIM METER ASSY. INCLINER-METRE	1					UR UR
	6Y7–83670–20	TRIM METER ASSY. INCLINER-METRE	1					UR UR
	6Y7–83670–50	TRIM METER ASSY. INCLINER-METRE	1					UR UR
2	6Y5–83518–00	.BULB (12V-1.7W T6.5) .AMPOULE (12V-1.7W T6.5)	1					
3	6Y5–83536–00	.SOCKET, METER .DOUILLE, COMPTEUR	1					
4	6Y5–83544–00	.PLATE, FITTING .PLAQUE, FIXATION	1					
5	688–83664–00	.DAMPER .AMORTISSEUR	1					
6	6Y7–83660–00	WATER PRESSURE METER ASSY INDICATEUR DE PRESSION D'EAU (	1					UR UR
	6Y7–83660–20	WATER PRESSURE METER ASSY INDICATEUR DE PRESSION D'EAU (	1					UR UR
	6Y7–83660–10	WATER PRESSURE METER ASSY INDICATEUR DE PRESSION D'EAU (	1					UR UR
	6Y7–83660–30	WATER PRESSURE METER ASSY INDICATEUR DE PRESSION D'EAU (	1					UR UR
7	6Y5–83518–00	.BULB (12V-1.7W T6.5) .AMPOULE (12V-1.7W T6.5)	1					
8	6Y5–83536–00	.SOCKET, METER .DOUILLE, COMPTEUR	1					
9	688–83664–00	.DAMPER .AMORTISSEUR	1					
10	688–83665–00	.PLATE, FITTING .ETRIER	1					
11	663–83668–00	.NUT, NIPPLE .RACCORD	1					
12	688–83667–00	SENDER RACCORD	1					
13	688–83666–00	.TUBE .TUBE	1					
14	663–83668–00	.NUT, NIPPLE .RACCORD	1					

COOLANT TEMP. METER

Description	Part No.	Applicable model
Black panel	6Y7-83590-00	40 [3-cylinder] – 300 F20 [65P] – F250 [6P2]
White panel	6Y7-83590-10	

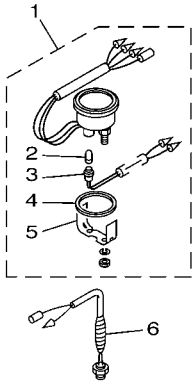

HOUR METER

Ref. No.	Description	Part No.	Applicable model
7	Mechanical	6Y5-83504-01	All electrical start models
14	Digital, Black panel	6Y7-83504-00	
	Digital, White panel	6Y7-83504-10	

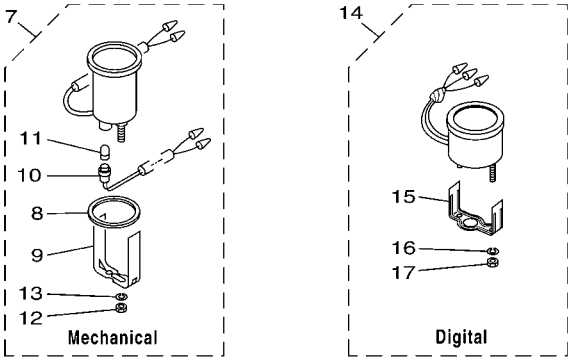

601M10M-H070

FIG. 7 METER 7 COMPTEUR 7

REF. NO.	PART NO. N° PIECES	DESCRIPTION DESCRIPTION	602M					REMARKS REMARQUES
1	6Y7–83590–00	WATER TEMPERATURE ASSY THERMOMETRE D'EAU	1					UR UR
	6Y7–83590–10	WATER TEMPERATURE ASSY THERMOMETRE D'EAU	1					UR UR
2	6Y5–83518–00	.BULB (12V-1.7W T6.5) .AMPOULE (12V-1.7W T6.5)	1					
3	6Y5–83536–00	.SOCKET, METER .DOUILLE, COMPTEUR	1					
4	688–83664–00	.DAMPER .AMORTISSEUR	1					
5	6Y5–83544–00	.PLATE, FITTING .PLAQUE, FIXATION	1					
6	688–83591–00	THERMO UNIT THERMOSTAT	1					
7	6Y5–83504–01	HOUR METER ASSY COMPTEUR D'HEURES (ENS.)	1					
8	688–83664–00	.DAMPER .AMORTISSEUR	1					
9	6Y5–83577–00	.PLATE, FITTING .PLAQUE, FIXATION	1					
10	6Y5–83536–00	.SOCKET, METER .DOUILLE, COMPTEUR	1					
11	6Y5–83518–00	.BULB (12V-1.7W T6.5) .AMPOULE (12V-1.7W T6.5)	1					
12	95303–04600	.NUT .ECROU	2					
13	92990–04100	.WASHER, SPRING .RONDELLE, GROWER	2					
14	6Y7–83504–00	HOUR METER ASSY COMPTEUR D'HEURES (ENS.)	1					UR UR
	6Y7–83504–10	HOUR METER ASSY COMPTEUR D'HEURES (ENS.)	1					UR UR
15	6Y5–8355X–H0	.BRACKET, METER 1 .CROCHET, COMPTEUR	1					
16	92990–04100	.WASHER, SPRING .RONDELLE, GROWER	2					
17	95380–04600	.NUT .ECROU	2					

VOLTAGE METER

Description	Part No.	Applicable model
DC 12 volts power supply Black panel	6Y7-83503-00	All electrical start models
DC 12 volts power supply White panel	6Y7-83503-10	

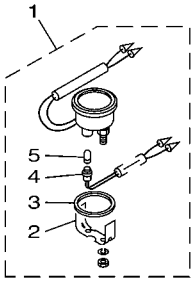

FUEL METER

Description	Part No.	Applicable model
For Yamaha sender (5 – 105Ω) Black panel	6Y7-85750-00	All electrical start models
For ABYC sender (30 – 240Ω) Black panel	6Y7-85750-10	
For Yamaha sender (5 – 105Ω) White panel	6Y7-85750-20	
For ABYC sender (30 – 240Ω) White panel	6Y7-85750-30	

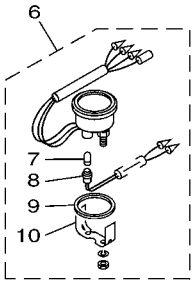

6011100-G840

FIG. 8 METER 8 COMPTEUR 8

REF. NO.	PART NO. N° PIECES	DESCRIPTION DESCRIPTION	602M					REMARKS REMARQUES
1	6Y7–83503–00	VOLTMETER ASSY VOLTMETRE COMPLETE	1					UR UR
	6Y7–83503–10	VOLTMETER ASSY VOLTMETRE COMPLETE	1					UR UR
2	6Y5–83544–00	.PLATE, FITTING .PLAQUE, FIXATION	1					
3	688–83664–00	.DAMPER .AMORTISSEUR	1					
4	6Y5–83536–00	.SOCKET, METER .DOUILLE, COMPTEUR	1					
5	6Y5–83518–00	.BULB (12V-1.7W T6.5) .AMPOULE (12V-1.7W T6.5)	1					
6	6Y7–85750–00	FUEL METER ASSY JAUGE A ESSENCE	1					UR UR
	6Y7–85750–10	FUEL METER ASSY JAUGE A ESSENCE	1					UR UR
	6Y7–85750–20	FUEL METER ASSY JAUGE A ESSENCE	1					UR UR
	6Y7–85750–30	FUEL METER ASSY JAUGE A ESSENCE	1					UR UR
7	6Y5–83518–00	.BULB (12V-1.7W T6.5) .AMPOULE (12V-1.7W T6.5)	1					
8	6Y5–83536–00	.SOCKET, METER .DOUILLE, COMPTEUR	1					
9	688–83664–00	.DAMPER .AMORTISSEUR	1					
10	6Y5–83544–00	.PLATE, FITTING .PLAQUE, FIXATION	1					

REMOTE-OIL TANK HARNESS ACCESSORY LEAD

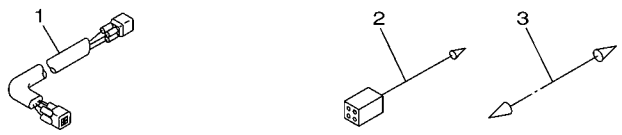

For V4, V6 oil injection model

METER HARNESS *(For analog meter)*

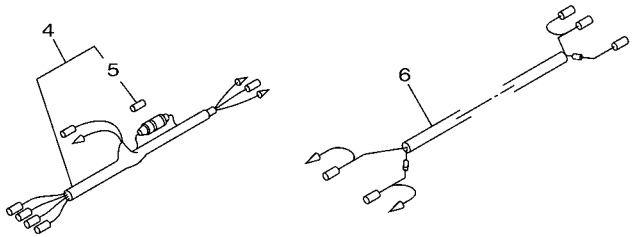

All except V4/ V6 For pre-mixed model

METER HARNESS *(For digital meter)*

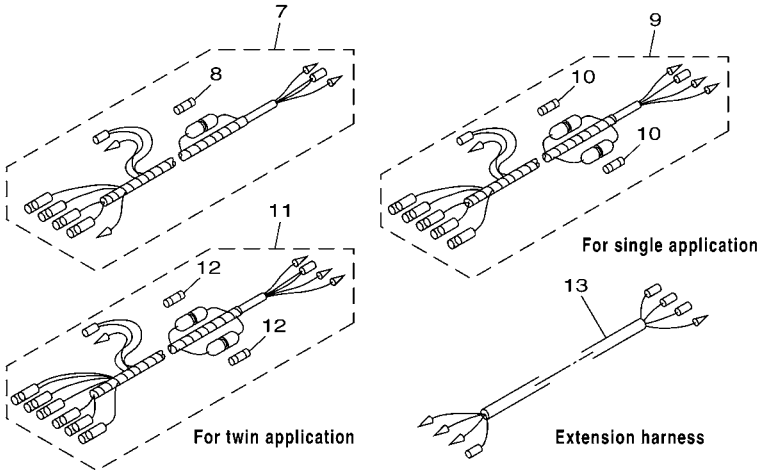

6011100-G850

FIG. 9 WIRE HARNESS 1 FAISCEAU DE FILS 1

REF. NO.	PART NO. N° PIECES	DESCRIPTION DESCRIPTION	602M					REMARKS REMARQUES
1	6R3–85721–30	WIRE, LEAD (L=3.0M) FIL, SECONDAIRE (L=3.0M)	1					UR (4P) UR (4P)
	6R3–85721–50	WIRE, LEAD (L=5.0M) FIL, SECONDAIRE (L=5.0M)	1					UR (4P) UR (4P)
	6R3–85721–80	WIRE, LEAD (L=8.0M) FIL, SECONDAIRE (L=8.0M)	1					UR (4P) UR (4P)
2	6Y5–82149–00	WIRE, LEAD (BLUE) (L300) FIL (BLEU) (L300)	1					UR UR
	6Y5–82117–00	WIRE, LEAD (BLACK) (L300) FIL (NOIR) (L300)	1					UR UR
3	703–82531–00	WIRE, LEAD (L70) FIL (L70)	1					L/H MODEL L/H MODEL
4	6Y5–83553–00	WIRE, LEAD (L=2.5M) FIL (L=2.5M)	1					
5	1E6–82151–00	.FUSE (10A) .FUSIBLE (10A)	1					
6	6Y5–83553–10	WIRE, LEAD (L=5.0M) FIL (L=5.0M)	1					
7	6Y5–83553–20	WIRE, LEAD (L=2.5M) FIL (L=2.5M)	1					L/H MODEL L/H MODEL
8	1E6–82151–00	.FUSE (10A) .FUSIBLE (10A)	1					
9	6Y5–83553–M0	WIRE, LEAD (L=2.5M) FIL (L=2.5M)	1					
10	1E6–82151–00	.FUSE (10A) .FUSIBLE (10A)	2					
11	6Y5–83553–N0	WIRE, LEAD (L=2.5M) FIL (L=2.5M)	1					
12	1E6–82151–00	.FUSE (10A) .FUSIBLE (10A)	2					
13	6Y5–8356N–00	WIRE, LEAD (L=1.5M) FIL (L=1.5M)	1					

FIG. 10 WIRE HARNESS 2 FAISCEAU DE FILS 2

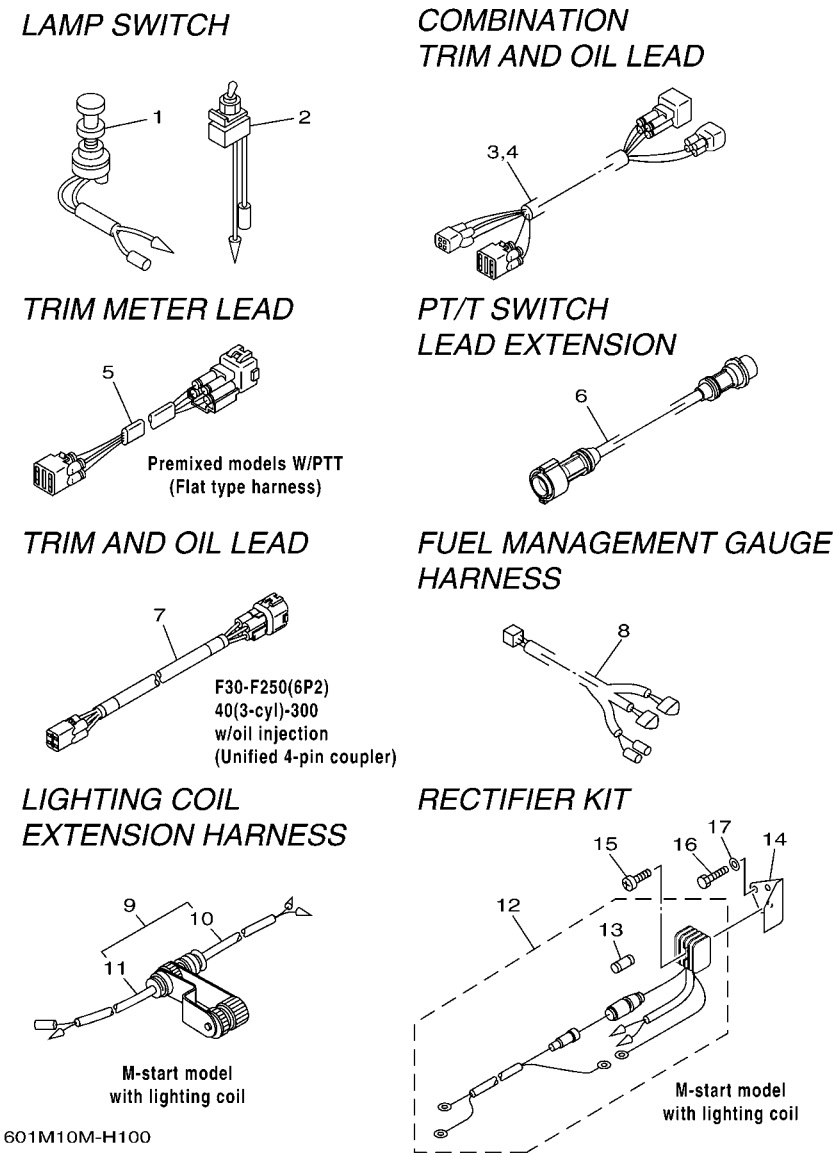

REF. NO.	PART NO. N° PIECES	DESCRIPTION DESCRIPTION	602M					REMARKS REMARQUES
1	688–82520–00	LIGHT SWITCH ASSY COMMUTATEUR D'ECLAIRAGE CPLT	1					
2	688–82526–00	SWITCH, LAMP INTERRUPTEUR, FEUX DE BORD	1					
3	64D–82553–50	EXTENSION, WIRE LEAD (L=5.0M) EXTENSION, FAISCEAU (L=5.0M)	1					UR FOR (L)250G UR FOR (L)250G
	64D–82553–70	EXTENSION, WIRE LEAD (L=7.0M) EXTENSION, FAISCEAU (L=7.0M)	1					UR FOR (L)250G UR FOR (L)250G
	64D–82553–80	EXTENSION, WIRE LEAD (L=8.0M) EXTENSION, FAISCEAU (L=8.0M)	1					UR FOR (L)250G UR FOR (L)250G
	64D–82553–90	EXTENSION, WIRE LEAD (L=9.5M) EXTENSION, FAISCEAU (L=9.5M)	1					UR FOR (L)250G UR FOR (L)250G
4	68F–82553–50	EXTENSION, WIRE LEAD (L=5.0M) EXTENSION, FAISCEAU (L=5.0M)	1					UR FOR (L)250G UR FOR (L)250G
	68F–82553–70	EXTENSION, WIRE LEAD (L=7.0M) EXTENSION, FAISCEAU (L=7.0M)	1					UR FOR (L)250G UR FOR (L)250G
	68F–82553–80	EXTENSION, WIRE LEAD (L=8.0M) EXTENSION, FAISCEAU (L=8.0M)	1					UR FOR (L)250G UR FOR (L)250G
	68F–82553–90	EXTENSION, WIRE LEAD (L=9.5M) EXTENSION, FAISCEAU (L=9.5M)	1					UR FOR (L)250G UR FOR (L)250G
	68F–82553–A0	EXTENSION, WIRE LEAD (L=10.5M) EXTENSION, FAISCEAU (L=10.5M)	1					UR FOR (L)250G UR FOR (L)250G
5	6R3–82553–30	EXTENSION, WIRE LEAD (L=3.0M) EXTENSION, FAISCEAU (L=3.0M)	1					UR (4P) UR (4P)
	6R3–82553–50	EXTENSION, WIRE LEAD (L=5.0M) EXTENSION, FAISCEAU (L=5.0M)	1					UR (4P) UR (4P)
	6R3–82553–70	EXTENSION, WIRE LEAD (L=7.0M) EXTENSION, FAISCEAU (L=7.0M)	1					UR (4P) UR (4P)
	6R3–82553–80	EXTENSION, WIRE LEAD (L=8.0M) EXTENSION, FAISCEAU (L=8.0M)	1					UR (4P) UR (4P)
	6R3–82553–90	EXTENSION, WIRE LEAD (L=9.0M) EXTENSION, FAISCEAU (L=9.0M)	1					UR (4P) UR (4P)
6	688–82586–11	EXTENSION, WIRE HARNESS (2.0M) EXTENSION, FAISCEAU DE FILS (2	1					L:2M(7P) L:2M(7P)
7	6Y5–83653–00	WIRE, LEAD (L=5.0M) FIL (L=5.0M)	1					UR 4P,5M UR 4P,5M
	6Y5–83653–10	WIRE, LEAD (L=6.0M) FIL (L=6.0M)	1					UR 4P,6M UR 4P,6M
	6Y5–83653–20	WIRE, LEAD (L=7.0M) FIL (L=7.0M)	1					UR 4P,7M UR 4P,7M
	6Y5–83653–30	WIRE, LEAD (L=8.0M) FIL (L=8.0M)	1					UR 4P,8M UR 4P,8M
	6Y5–83653–40	WIRE, LEAD (L=9.0M) FIL (L=9.0M)	1					UR 4P,9M UR 4P,9M
	6Y5–83653–50	WIRE, LEAD (L=10.5M) FIL (L=10.5M)	1					UR 4P,10.5M UR 4P,10.5M
8	6Y5–83553–F1	WIRE, LEAD (L=8.0M) FIL (L=8.0M)	1					
9	682–84380–00	CONCENT 2P RALLONGE 2 FILS	1					
10	682–84381–00	.2P CONCENT .RALLONGE 2 FILS	1					
11	682–84382–00	.2P CONCEMT .RALLONGE 2 FILS	1					

FIG. 10 WIRE HARNESS 2 — FAISCEAU DE FILS 2

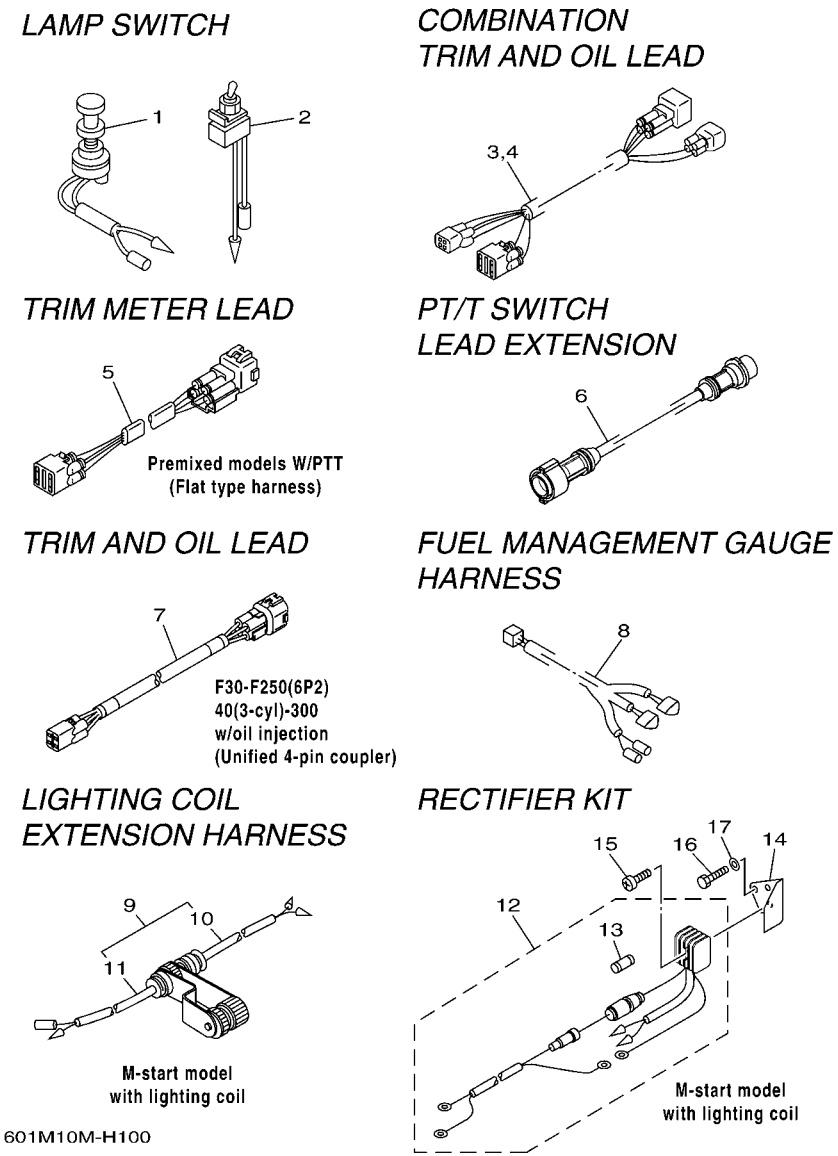

REF. NO.	PART NO. N° PIECES	DESCRIPTION DESCRIPTION	602M					REMARKS REMARQUES
12	676–81970–01	RECTIFIER ASSY REDRESSEUR COMPLET	1					
13	663–82151–00	.FUSE (12V-20A) .FUSIBLE (12V-20A)	1					
14	677–81975–00	PLATE, RECTIFIER FITTING PLAQUE, FIXATION DU REDRESSEUR	1					
15	97880–05025	SCREW, PAN HEAD VIS, TETE TRONCONIQUE	1					
16	97013–06010	BOLT BOULON	2					
17	92903–06600	WASHER, PLATE RONDELLE, PLATE	2					

CHARGE WARNING UNIT

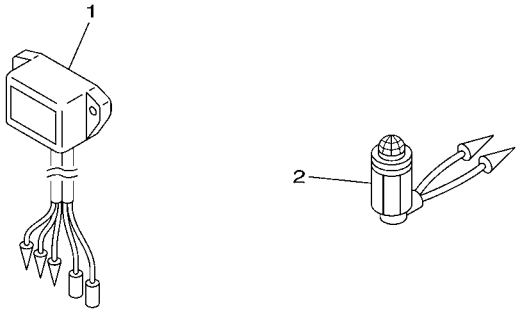

All electrical start models
with a rectifier/ regulator

BATTERY WIRING

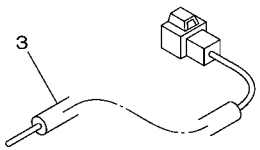

601M10M-H110

FIG. 11 ELECTRICAL PARTIE ELECTRIQUE

REF. NO.	PART NO. N° PIECES	DESCRIPTION DESCRIPTION	602M					REMARKS REMARQUES
1	697–81901–60	CHARGE WARNING UNIT ASSY CHARGER AVERTISSEMENT (ENS.)	1					
2	663–84301–01	PILOT LIGHT ASSY 1 LAMPE-TEMOIN 1	1					12V 12V
3	68F–81949–02	WIRE, LEAD (ISOLATOR, 2.7M) FIL (ISOLATOR, 2.7M)	1					UR UR
	69J–81949–02	WIRE, LEAD (ISOLATOR, 3.8M) FIL (ISOLATOR, 3.8M)	1					UR UR

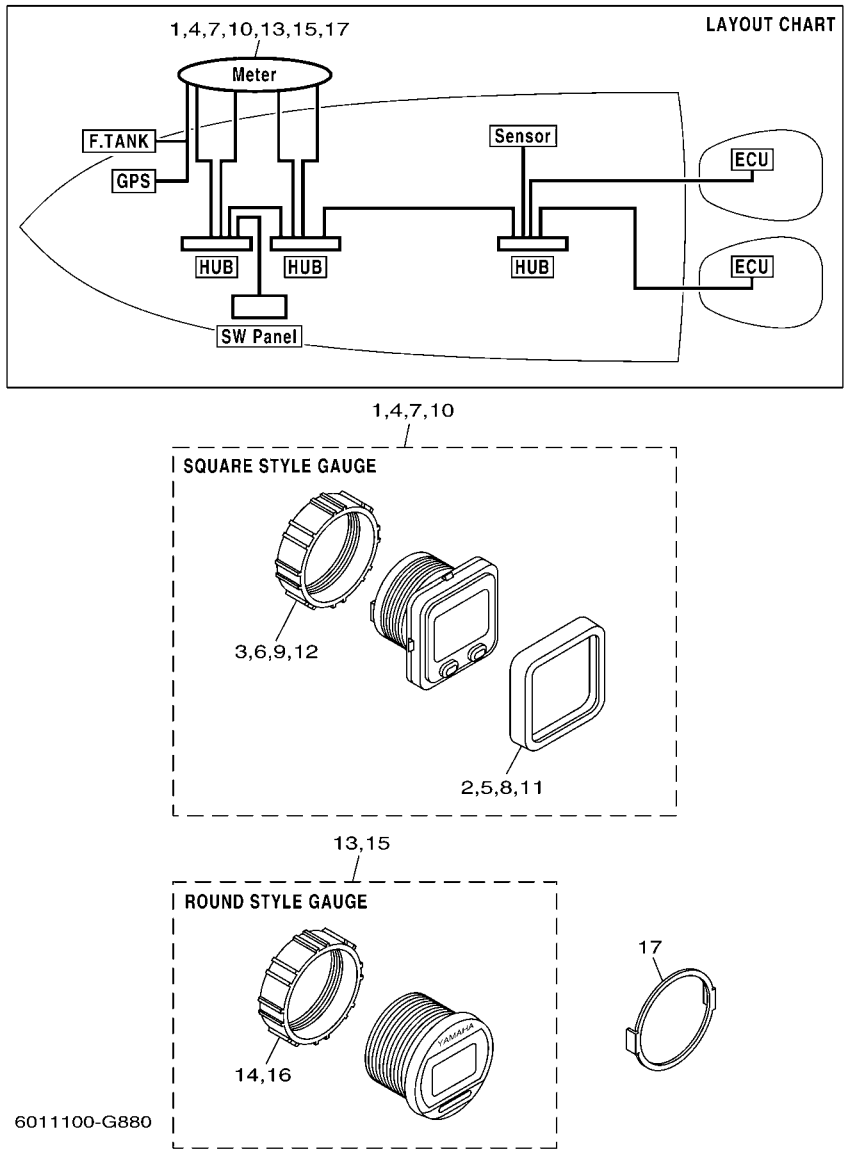

FIG. 12 DIGITAL NETWORK GAUGE 1 DIGITAL RESEAU JAUGE 1

REF. NO.	PART NO. N° PIECES	DESCRIPTION DESCRIPTION	602M					REMARKS REMARQUES
1	6Y8–8350T–01	TACHOMETER, SQ COMPTE-TOURS CPLT	1					
2	6Y8–83363–00	.BEZEL, SQUARE .LENTILLE	1					
3	6Y8–84383–00	.NUT, RING .ECROU ANNULAIRE	1					
4	6Y8–8350S–01	SPEEDOMETER, SQ COMPTEUR DE VITESSE CPLT	1					
5	6Y8–83363–00	.BEZEL, SQUARE .LENTILLE	1					
6	6Y8–84383–00	.NUT, RING .ECROU ANNULAIRE	1					
7	6Y8–8350F–01	FL MGT METER, SQ COMPT. DE GESTION DU CARBURANT	1					FUEL MANAGEMENT FUEL MANAGEMENT
8	6Y8–83363–00	.BEZEL, SQUARE .LENTILLE	1					
9	6Y8–84383–00	.NUT, RING .ECROU ANNULAIRE	1					
10	6Y8–83500–01	S&FM METER, SQ COMPTEUR COMPLET	1					SPEED & FUEL SPEED & FUEL
11	6Y8–83363–00	.BEZEL, SQUARE .LENTILLE	1					
12	6Y8–84383–00	.NUT, RING .ECROU ANNULAIRE	1					
13	6Y8–8350T–11	TACHOMETER, RD COMPTE-TOURS CPLT	1					
14	6Y8–84383–00	.NUT, RING .ECROU ANNULAIRE	1					
15	6Y8–83500–11	S&FM METER, RD COMPTEUR COMPLET	1					SPEED & FUEL SPEED & FUEL
16	6Y8–84383–00	.NUT, RING .ECROU ANNULAIRE	1					
17	6Y8–83514–00	PLATE, FITTING PLAQUE, FIXATION	1					UN UN

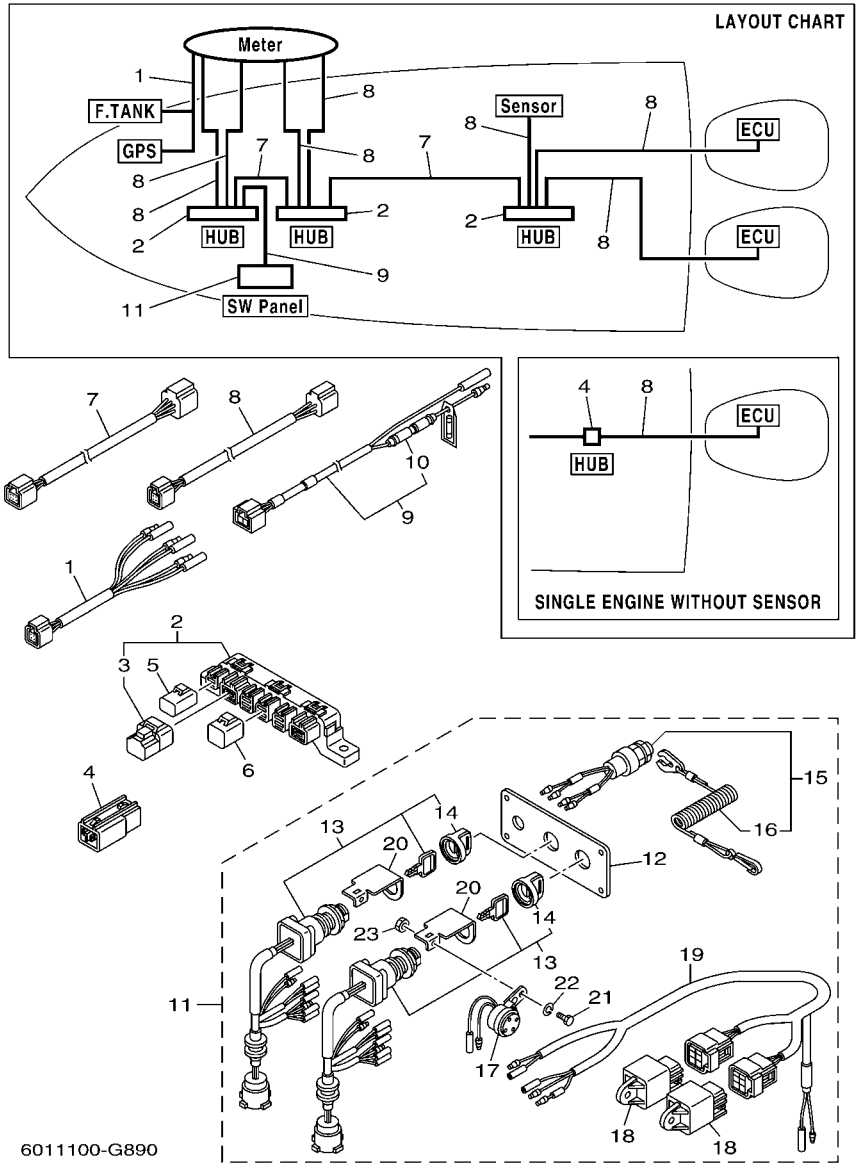

FIG. 13 DIGITAL NETWORK GAUGE 2 DIGITAL RESEAU JAUGE 2

REF. NO.	PART NO. N° PIECES	DESCRIPTION DESCRIPTION	602M					REMARKS REMARQUES
1	6Y8–8356N–01	LEAD, FUEL TANK & GPS SENDER FIL	1					
2	6Y8–81920–01	MULTI HUB ASSY BORNE	1					UN UN
3	6Y8–85371–01	.END OF LINE RESISTER .RESISTANCE COMP.	1					
4	6Y8–81920–11	IN-LINE HUB ASSY BORNE	1					
5	6Y8–82582–01	CAP 1 (2PIN) COUVERCLE, FAISCEAU DE FILS	1					UN UN
6	6Y8–82582–11	CAP 1 (4PIN) COUVERCLE, FAISCEAU DE FILS	1					UN UN
7	6Y8–82553–01	1FT MAIN BUS EXTENSION, FAISCEAU	1					UR UR
	6Y8–82553–11	15FT MAIN BUS EXTENSION, FAISCEAU	1					UR UR
	6Y8–82553–21	20FT MAIN BUS EXTENSION, FAISCEAU	1					UR UR
	6Y8–82553–31	25FT MAIN BUS EXTENSION, FAISCEAU	1					UR UR
	6Y8–82553–41	30FT MAIN BUS EXTENSION, FAISCEAU	1					UR UR
	6Y8–82553–50	10FT MAIN BUS EXTENSION, FAISCEAU	1					UR UR
8	6Y8–82521–01	1FT PIGTAIL BUS FIL	1					UR UR
	6Y8–82521–11	2FT PIGTAIL BUS FIL	1					UR UR
	6Y8–82521–21	3FT PIGTAIL BUS FIL	1					UR UR
	6Y8–82521–31	6FT PIGTAIL BUS FIL	1					UR UR
	6Y8–82521–41	9FT PIGTAIL BUS FIL	1					UR UR
	6Y8–82521–51	12FT PIGTAIL BUS FIL	1					UR UR
9	6Y8–83553–01	8FT POWER WIRE FIL	1					
10	6G1–82151–00	.FUSE (10A) .FUSIBLE (10A)	1					
11	6Y8–82570–02	PANEL SW., TWIN PLATINE D'INTERRUPEUR CPLT	1					
12	6Y8–82571–01	.PLATE, PANEL SWITCH .TABLEAU, CONTACTEUR	1					
13	6Y8–82510–02	.MAIN SWITCH ASSY .CONTACTEUR A CLEF COMPLET	2					
14	676–82577–00	..CAP, KEY ..CABOCHON	1					
15	6K1–82575–00	.ENGINE STOP SWITCH ASSY .COUPE CIRCUIT CPLT	1					
16	682–82556–00	..LANYARD, STOP SWITCH ..PLAQUETTE	1					
17	6R5–83383–00	.BUZZER .RONFLEUR	2					

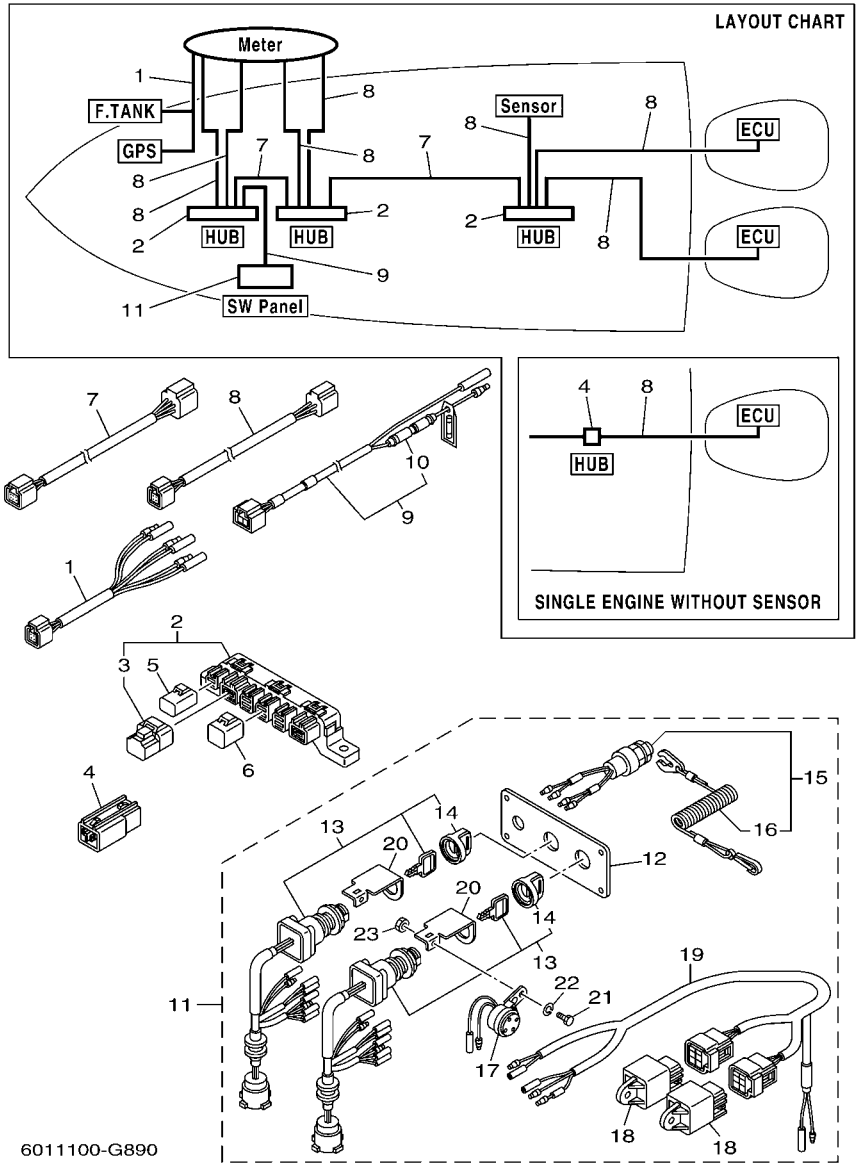

FIG. 13 DIGITAL NETWORK GAUGE 2 DIGITAL RESEAU JAUGE 2

REF. NO.	PART NO. N° PIECES	DESCRIPTION DESCRIPTION	602M					REMARKS REMARQUES
18	68V–81950–00	.RELAY ASSY .RELAIS COMPLET	2					
19	6Y8–82507–00	.LEAD, IGNITION SWITCH RELAY .FIL	1					
20	64D–82581–00	.STAY, CORD CLAMP .SUPPORT, COLLIER DE CORDON	2					
21	97303–05012	.BOLT .BOULON	2					
22	92903–05100	.WASHER, SPRING .RONDELLE, GROWER	2					
23	95303–05700	.NUT .ECROU	2					

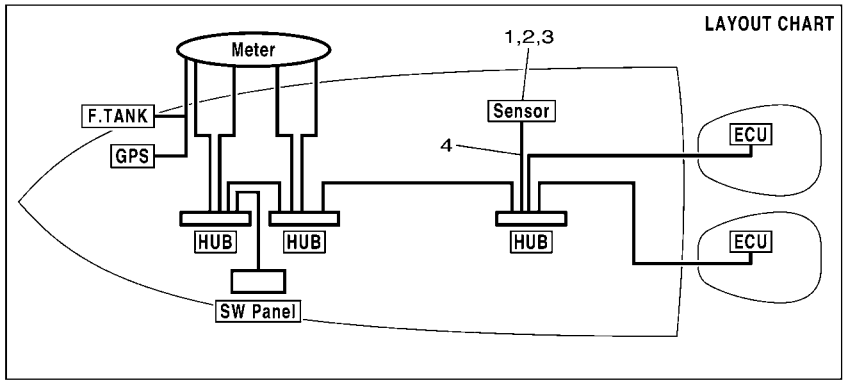

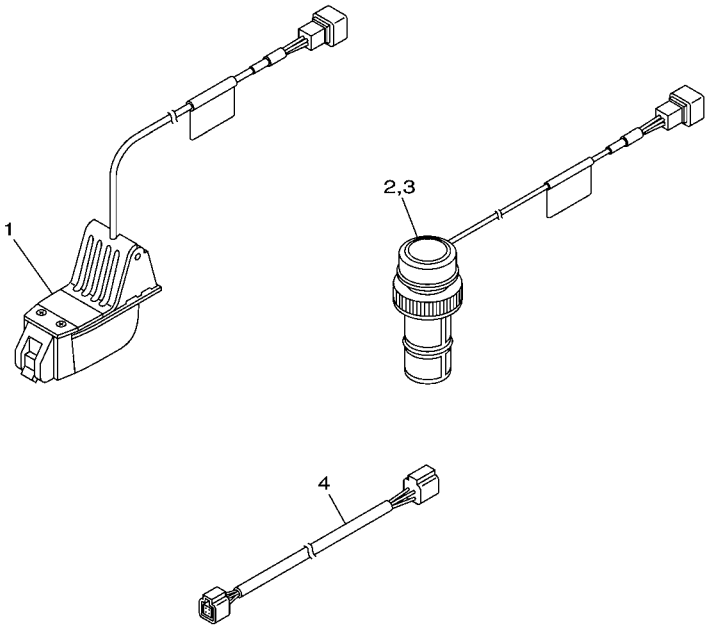

6Y82110-E030

FIG. 14 DIGITAL NETWORK GAUGE 3 DIGITAL RESEAU JAUGE 3

REF. NO.	PART NO. N° PIECES	DESCRIPTION DESCRIPTION	602M					REMARKS REMARQUES
1	6Y8–83688–01	TRANSOM MOUNT TRIDUCER SONDE (ENS.)	1					
2	6Y8–83688–11	PLASTIC THRU-HULL TRIDUCER SONDE (ENS.)	1					
3	6Y8–83688–20	BRONZE THRU-HULL TRIDUCER SONDE (ENS.)	1					
4	6Y8–82521–01	1FT PIGTAIL BUS FIL	1					UR UR
	6Y8–82521–11	2FT PIGTAIL BUS FIL	1					UR UR
	6Y8–82521–21	3FT PIGTAIL BUS FIL	1					UR UR
	6Y8–82521–31	6FT PIGTAIL BUS FIL	1					UR UR
	6Y8–82521–41	9FT PIGTAIL BUS FIL	1					UR UR
	6Y8–82521–51	12FT PIGTAIL BUS FIL	1					UR UR

Cooling water pressure sensor

Part No.	Remarks
60V-8A4L0-11	Fuel injected F50-F115, HPDI

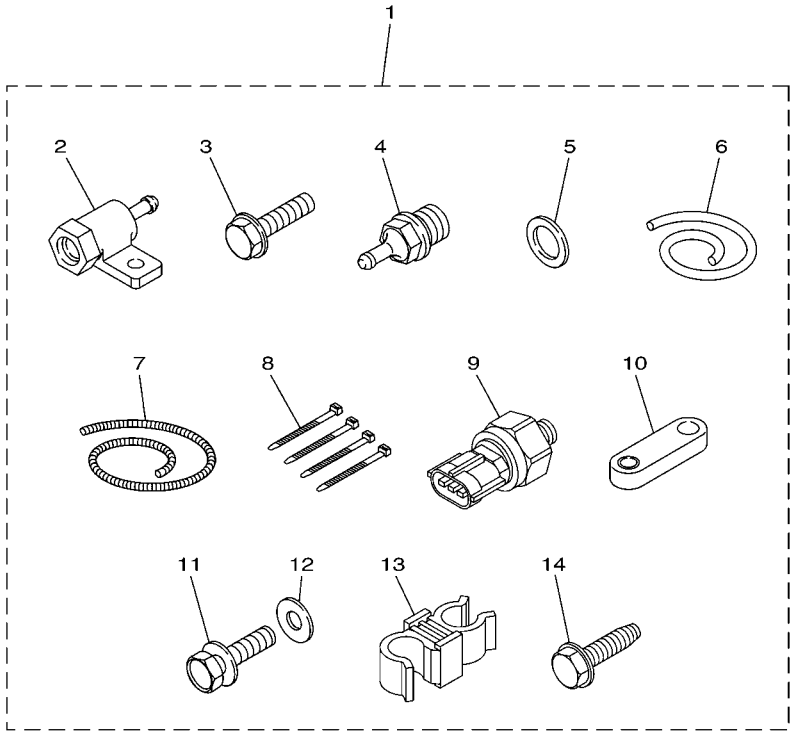

601M10M-H150

FIG. 15 DIGITAL NETWORK GAUGE 4 DIGITAL RESEAU JAUGE 4

REF. NO.	PART NO. N° PIECES	DESCRIPTION DESCRIPTION	602M					REMARKS REMARQUES
1	60V–8A4L0–11	SENSOR, MODULE SENSOR (ENS.)	1					
2	60V–8366D–00	.ADAPTOR, INPUT .CONNECTEUR 3	1					
3	95895–06025	.BOLT, FLANGE .BOULON	1					
4	60V–83667–00	.SENDER, WATER PRESSURE .SONDE DE PRESSION D'EAU	1					
5	90430–14115	.GASKET .JOINT	1					
6	90445–07018	.HOSE (L1400) .DURITE (L1400)	1					
7	90447–07015	.HOSE, COVER (L: 1300MM) .DURITE, COUVERCLE (L: 1300MM)	1					
8	90465–11M10	.CLAMP .BRIDE	4					
9	6AW–8366B–00	.SENSOR, WATER PRESSURE .SONDE DE PRESSION D'EAU	1					
10	60V–8257V–00	.PLATE, CONNECTOR .PLAQUE, CONNECTEUR	1					
11	97095–06016	.BOLT .BOULON	1					
12	92995–06600	.WASHER .RONDELLE	1					
13	90464–09021	.CLAMP .BRIDE	1					
14	90109–06M81	.BOLT .BOULON	1					

Cooling water pressure sensor

Part No.	Remarks
69J-8A4L0-11	F150-F250

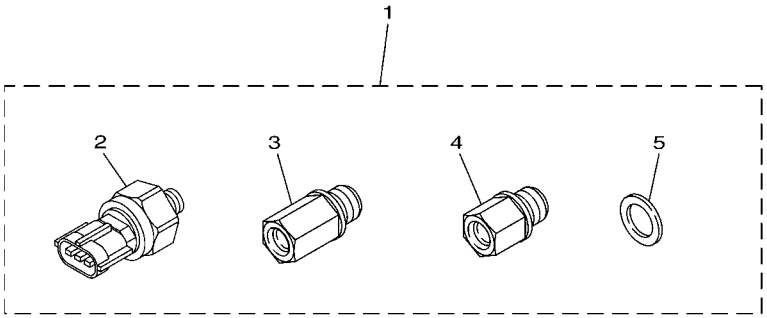

601M10M-H160

FIG. 16 DIGITAL NETWORK GAUGE 5 DIGITAL RESEAU JAUGE 5

REF. NO.	PART NO. N° PIECES	DESCRIPTION DESCRIPTION	602M					REMARKS REMARQUES
1	69J–8A4L0–11	SENSOR, MODULE SENSOR (ENS.)	1					
2	6AW–8366B–00	.SENSOR, WATER PRESSURE .SONDE DE PRESSION D'EAU	1					
3	69J–8366C–00	.ADAPTOR, INPUT .CONNECTEUR 2	1					
4	63P–8366C–00	.ADAPTOR, INPUT .CONNECTEUR 2	1					
5	90430–14115	.GASKET .JOINT	1					

Speed sensor

Part No.	Remarks
60V-8A4L1-11	Fuel injected F50-F250, HPDI

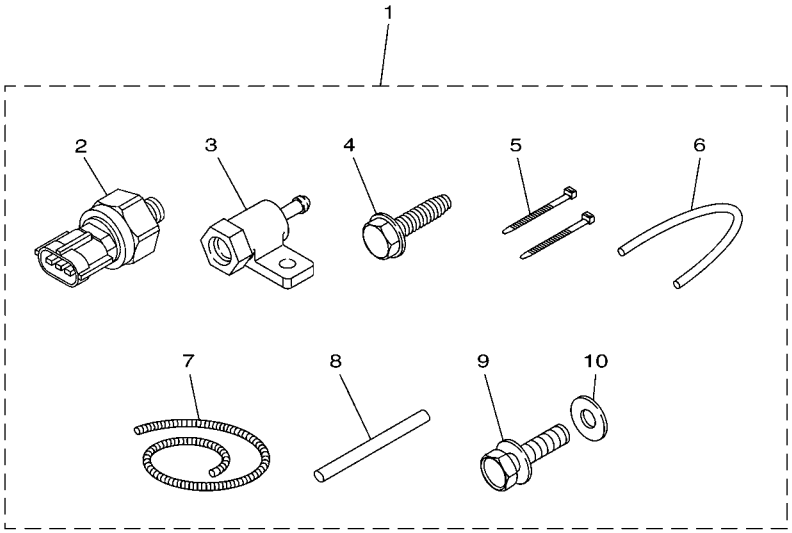

601M10M-H170

FIG. 17 DIGITAL NETWORK GAUGE 6 DIGITAL RESEAU JAUGE 6

REF. NO.	PART NO. N° PIECES	DESCRIPTION DESCRIPTION	602M					REMARKS REMARQUES
1	60V–8A4L1–11	SENSOR, MODULE 1 SENSOR (ENS.) 1	1					
2	6AW–8366B–00	.SENSOR, WATER PRESSURE .SONDE DE PRESSION D'EAU	1					
3	60V–8366D–00	.ADAPTOR, INPUT .CONNECTEUR 3	1					
4	90109–06M81	.BOLT .BOULON	1					
5	90465–11M10	.CLAMP .BRIDE	2					
6	90445–07017	.HOSE (L: 550MM) .DURITE (L: 550MM)	1					
7	90447–07013	.HOSE, COVER (L: 700MM) .DURITE, COUVERCLE (L: 700M)	1					
8	60V–42629–00	.SEAL .JOINT	1					
9	97095–06016	.BOLT .BOULON	1					
10	92995–06600	.WASHER .RONDELLE	1					

Speed sensor

Part No.	Remarks
6AW-8A4L1-01	F300/F350 * Additional transom pitot tube (688-83556-01) and pressure tube(688-83557-00) required.

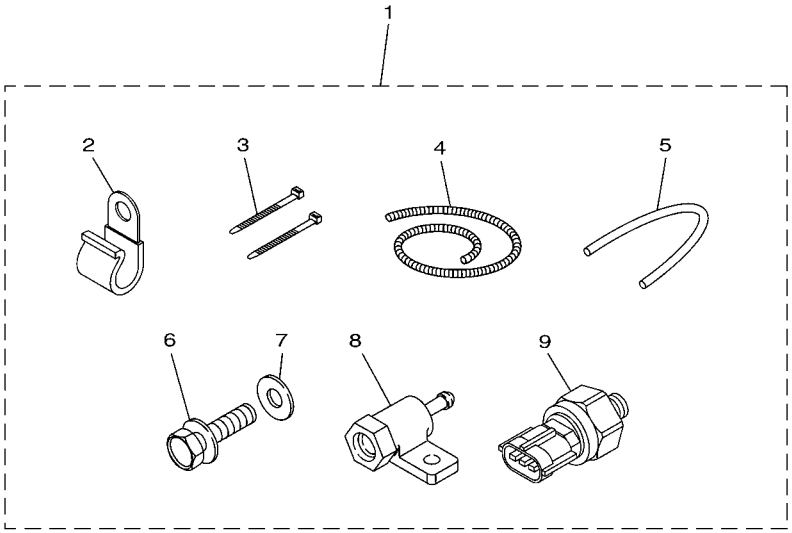

601M10M-H180

FIG. 18 DIGITAL NETWORK GAUGE 7 DIGITAL RESEAU JAUGE 7

REF. NO.	PART NO. N° PIECES	DESCRIPTION DESCRIPTION	602M					REMARKS REMARQUES
1	6AW–8A4L1–01	SENSOR, MODULE 1 SENSOR (ENS.) 1	1					
2	90465–06M86	.CLAMP .BRIDE	2					
3	90465–14M66	.CLAMP .BRIDE	2					
4	90447–07015	.HOSE, COVER (L: 1300MM) .DURITE, COUVERCLE (L: 1300MM)	1					
5	90445–07018	.HOSE (L1400) .DURITE (L1400)	1					
6	97095–06016	.BOLT .BOULON	1					
7	92995–06600	.WASHER .RONDELLE	1					
8	60V–8366D–00	.ADAPTOR, INPUT .CONNECTEUR 3	1					
9	6AW–8366B–00	.SENSOR, WATER PRESSURE .SONDE DE PRESSION D'EAU	1					

NUMERICAL INDEX
INDEX NUMERIQUE

PART NO. N° PIECES	REF. NO.
60V–42629–00	17 – 8
697–81901–60	11 – 1
6Y8–81920–01	13 – 2
6Y8–81920–11	13 – 4
68F–81949–02	11 – 3
69J–81949–02	11 – 3
68V–81950–00	13 – 18
676–81970–01	10 – 12
677–81975–00	10 – 14
6Y5–82117–00	5 – 10
	9 – 2
6Y5–82149–00	9 – 2
1E6–82151–00	9 – 5
	9 – 8
	9 – 10
	9 – 12
663–82151–00	10 – 13
6G1–82151–00	13 – 10
6Y8–82507–00	13 – 19
6Y8–82510–02	13 – 13
688–82520–00	10 – 1
6Y8–82521–01	13 – 8
	14 – 4
6Y8–82521–11	13 – 8
	14 – 4
6Y8–82521–21	13 – 8
	14 – 4
6Y8–82521–31	13 – 8
	14 – 4
6Y8–82521–41	13 – 8
	14 – 4
6Y8–82521–51	13 – 8
	14 – 4
688–82526–00	10 – 2
703–82531–00	5 – 11
	9 – 3
6Y8–82553–01	13 – 7
6Y8–82553–11	13 – 7
6Y8–82553–21	13 – 7
6R3–82553–30	10 – 5
6Y8–82553–31	13 – 7
6Y8–82553–41	13 – 7
64D–82553–50	10 – 3
68F–82553–50	10 – 4
6R3–82553–50	10 – 5
6Y8–82553–50	13 – 7
64D–82553–70	10 – 3
68F–82553–70	10 – 4

PART NO. N° PIECES	REF. NO.
6R3–82553–70	10 – 5
64D–82553–80	10 – 3
68F–82553–80	10 – 4
6R3–82553–80	10 – 5
64D–82553–90	10 – 3
68F–82553–90	10 – 4
6R3–82553–90	10 – 5
68F–82553–A0	10 – 4
682–82556–00	13 – 16
6Y8–82570–02	13 – 11
6Y8–82571–01	13 – 12
6K1–82575–00	13 – 15
676–82577–00	13 – 14
60V–8257V–00	15 – 10
64D–82581–00	13 – 20
6Y8–82582–01	13 – 5
6Y8–82582–11	13 – 6
688–82586–11	10 – 6
6Y8–83363–00	12 – 2
	12 – 5
	12 – 8
	12 – 11
6R5–83383–00	13 – 17
6Y8–83500–01	12 – 10
6Y8–83500–11	12 – 15
6Y5–83500–30	3 – 10
6Y5–83500–40	5 – 12
6Y5–83500–F2	5 – 2
6Y7–83503–00	8 – 1
6Y7–83503–10	8 – 1
6Y7–83504–00	7 – 14
6Y5–83504–01	7 – 7
6Y7–83504–10	7 – 14
6Y5–83509–03	2 – 13
6Y8–8350F–01	12 – 7
6Y8–8350S–01	12 – 4
6Y8–8350T–01	12 – 1
6Y5–8350T–03	1 – 1
6Y8–8350T–11	12 – 13
6Y5–8350T–90	1 – 7
6Y7–83510–00	4 – 1
6Y7–83510–10	4 – 1
6Y7–83510–20	4 – 1
6Y7–83510–30	4 – 1
6Y7–83510–40	4 – 1
6Y7–83510–50	4 – 1
6Y7–83510–60	4 – 1
6Y7–83510–70	4 – 1

PART NO. N° PIECES	REF. NO.
6Y5–83514–00	2 – 5
	2 – 12
	2 – 21
	4 – 5
6Y8–83514–00	12 – 17
6Y5–83517–00	2 – 2
	2 – 9
	2 – 18
	4 – 2
6Y5–83518–00	2 – 14
	2 – 22
	6 – 2
	6 – 7
	7 – 2
	7 – 11
	8 – 5
	8 – 7
6Y5–83523–00	2 – 4
	2 – 11
	2 – 20
	4 – 4
6Y5–83533–T2	3 – 4
	3 – 14
	5 – 16
6Y5–83536–00	6 – 3
	6 – 8
	7 – 3
	7 – 10
	8 – 4
	8 – 8
6Y5–83536–10	2 – 3
6Y5–83536–40	2 – 3
	2 – 10
	2 – 19
	4 – 3
6Y7–83540–00	2 – 8
6Y7–83540–10	2 – 8
6Y7–83540–20	2 – 1
6Y7–83540–30	2 – 1
6Y7–83540–80	2 – 17
6Y7–83540–90	2 – 17
6Y5–83544–00	6 – 4
	7 – 5
	8 – 2
	8 – 10
6Y5–83553–00	9 – 4
6Y8–83553–01	13 – 9
6Y5–83553–10	9 – 6

PART NO. N° PIECES	REF. NO.
6Y5–83553–20	9 – 7
6Y5–83553–F1	5 – 7
	5 – 17
	10 – 8
6Y5–83553–M0	9 – 9
6Y5–83553–N0	9 – 11
688–83557–00	4 – 6
6Y5–83557–00	3 – 20
6Y5–83557–31	3 – 7
	3 – 16
6Y5–8355X–H0	7 – 15
6Y5–8355X–T1	1 – 6
	1 – 11
	3 – 5
	3 – 15
	5 – 4
	5 – 13
6Y5–8356N–00	9 – 13
6Y8–8356N–01	13 – 1
6Y5–83570–30	3 – 11
6Y5–83570–S5	3 – 1
6Y5–83577–00	7 – 9
6Y7–83590–00	7 – 1
6Y7–83590–10	7 – 1
688–83591–00	7 – 6
6Y5–83653–00	10 – 7
6Y5–83653–10	10 – 7
6Y5–83653–20	10 – 7
6Y5–83653–30	10 – 7
6Y5–83653–40	10 – 7
6Y5–83653–50	10 – 7
6Y7–83660–00	6 – 6
6Y7–83660–10	6 – 6
6Y7–83660–20	6 – 6
6Y7–83660–30	6 – 6
688–83664–00	6 – 5
	6 – 9
	7 – 4
	7 – 8
	8 – 3
	8 – 9
688–83665–00	6 – 10
688–83666–00	6 – 13
60V–83667–00	15 – 4
688–83667–00	6 – 12
663–83668–00	6 – 11
	6 – 14
6AW–8366B–00	15 – 9

PART NO. N° PIECES	REF. NO.
6AW–8366B–00	16 – 2
	17 – 2
	18 – 9
63P–8366C–00	16 – 4
69J–8366C–00	16 – 3
60V–8366D–00	15 – 2
	17 – 3
	18 – 8
6Y7–83670–00	6 – 1
6Y7–83670–20	6 – 1
6Y7–83670–40	6 – 1
6Y7–83670–50	6 – 1
6Y8–83688–01	14 – 1
6Y8–83688–11	14 – 2
6Y8–83688–20	14 – 3
6Y5–83728–00	3 – 8
	3 – 17
663–84301–01	11 – 2
682–84380–00	10 – 9
682–84381–00	10 – 10
682–84382–00	10 – 11
6Y8–84383–00	12 – 3
	12 – 6
	12 – 9
	12 – 12
	12 – 14
	12 – 16
6Y8–85371–01	13 – 3
6R3–85721–30	9 – 1
6R3–85721–50	9 – 1
6R3–85721–80	9 – 1
6Y5–85721–F0	5 – 20
6Y7–85750–00	8 – 6
6Y7–85750–10	8 – 6
6Y7–85750–20	8 – 6
6Y7–85750–30	8 – 6
6Y5–85752–02	5 – 8
	5 – 8
	5 – 18
6Y5–87122–S0	3 – 6
	3 – 19
	5 – 3
60V–8A4L0–11	15 – 1
69J–8A4L0–11	16 – 1
6AW–8A4L1–01	18 – 1
60V–8A4L1–11	17 – 1
6Y5–W0088–54	5 – 1
6Y5–W0088–65	5 – 1

PART NO. N° PIECES	REF. NO.
90109–06M81	15 – 14
	17 – 4
90158–06003	5 – 9
	5 – 9
	5 – 19
90430–14115	15 – 5
	16 – 5
90445–07017	17 – 6
90445–07018	15 – 6
	18 – 5
90447–07013	17 – 7
90447–07015	15 – 7
	18 – 4
90464–09021	15 – 13
90465–06M86	18 – 2
90465–11M10	3 – 9
	3 – 18
	3 – 21
	4 – 7
	15 – 8
	17 – 5
90465–14M66	18 – 3
92903–05100	2 – 16
	13 – 22
92903–06600	10 – 17
92990–04100	1 – 4
	1 – 9
	3 – 2
	3 – 12
	5 – 5
	5 – 14
	7 – 13
	7 – 16
92990–05100	2 – 7
	2 – 24
92995–06600	15 – 12
	17 – 10
	18 – 7
95303–04600	7 – 12
95303–05600	2 – 15
95303–05700	13 – 23
95380–04600	1 – 5
	1 – 10
	3 – 3
	3 – 13
	5 – 6
	5 – 15
	7 – 17

NUMERICAL INDEX
INDEX NUMERIQUE

PART NO. N° PIECES	REF. NO.	PART NO. N° PIECES	REF. NO.	PART NO. N° PIECES	REF. NO.	PART NO. N° PIECES	REF. NO.	PART NO. N° PIECES	REF. NO.	PART NO. N° PIECES	REF. NO.
95380–05600	2 – 6										
	2 – 23										
95895–06025	15 – 3										
97013–06010	10 – 16										
97095–06016	15 – 11										
	17 – 9										
	18 – 6										
97303–05012	13 – 21										
97880–05025	10 – 15										
9E450–04433	1 – 2										
9E450–04533	1 – 3										
	1 – 8										