YAMAHA

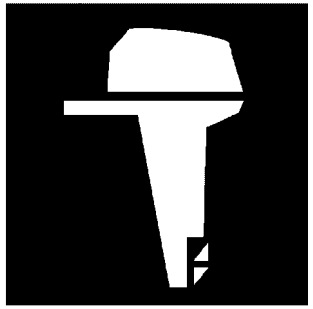

PARTS CATALOGUE

RIGGING-REMOCON

YAMAHA
GENUINE
Parts & Accessories

1V601-10REA

( )

RIGGING-REMOCON
PARTS CATALOGUE
©2021 by Yamaha Motor Co., Ltd.
1st edition, November 2021
All rights reserved.
Any reprinting or unauthorized use
without the written permission of
Yamaha Motor Co., Ltd.
is expressly prohibited.
Printed in Japan.

FOREWORD

This Parts Catalogue is related to the parts for the model(s) on the cover page. When you are ordering replacement parts, please refer to this Parts Catalogue and quote both part numbers and part names correctly.

1. Modifications or additions which have been made after the issue of the Parts Catalogue will be announced in the Parts News.
   It is advisable that you make the necessary corrections to the Parts Catalogue according to the Parts News.

2. Abbreviations
   The following abbreviations are used in this Parts Catalogue.

   "UR" Use specified parts number.

   "UN" Use as many as needed.

   "AP" Alternate Parts

   "LM" Locally Made (Parts need to be ordered locally)

   "F#" Frame No. (Applicable machine No.)

   "O/S" Over Size

3. The number of components for assembly
   - Parts, which are to be supplied in an assembly, are listed with a dot (.) in front of the part name as shown below.
   - The numeral appearing to the right of each component part indicates the quantity of parts for each assembly unit.

PART NO.	DESCRIPTION	Q'TY	REMARKS
2F5–83310–60	FRONT FLASHER LIGHT ASSY	2	
115–83311–60	.BULB (6V–18W)	1	

4. Applicable colours of graphics are represented in the "REMARKS" as shown below.

PART NO.	DESCRIPTION	Q'TY	REMARKS
2N4–24110–00–X5	FUEL TANK COMP.	2	MXR
3J1–24240–10	.GRAPHIC, FUEL TANK	1	FOR MXR

5. Note that the illustrations for reference in finding parts numbers are not to be used for assembling. When assembling, please use the applicable service manual.

6. The asterisk (*) before a reference number indicates modified items after the first edition.

CONTENTS

REMOTE CONTROL BOX 1 1
REMOTE CONTROL BOX 2 2
REMOTE CONTROL BOX 3 3
REMOTE CONTROL ASSY 1 4
REMOTE CONTROL ASSY 2 7
REMOTE CONTROL ASSY 3 10
REMOTE CONTROL ASSY 4 13
REMOTE CONTROL ASSY 5 16
REMOTE CONTROL ASSY 6 19
REMOTE CONTROL ASSY 7 22
REMOTE CONTROL ASSY 8 25
REMOTE CONTROL CABLES 29
DEC 1 (SINGLE) 30
DEC 2 (MULTIPLE) 31
DEC 3 (FLUSH SIDE MOUNT) 32
DEC 4 (SINGLE/MAIN ST) 33
DEC 5 (TWIN/MAIN ST) 34
DEC 6 (TRIPLE/MAIN ST) 35
DEC 7 (QUAD/MAIN ST) 36
DEC 8 (FLUSH MOUNT/MAIN ST) 37
DEC 9 (SINGLE/2ND ST) 38
DEC 10 (MULTIPLE/2ND ST) 39
DEC 11 (FLUSH MOUNT/2ND ST) 40
SWITCH & PANEL 1 41
SWITCH & PANEL 2 42
SWITCH & PANEL 3 43
SWITCH & PANEL 4 44
SWITCH & PANEL 5 45
SWITCH & PANEL 6 46
SWITCH & PANEL 7 47
SWITCH & PANEL 8 48
SWITCH & PANEL 9 49
SWITCH & PANEL 10 50
SWITCH & PANEL 11 51
SWITCH & PANEL 12 52
SWITCH & PANEL 13 53
SWITCH & PANEL 14 54
SWITCH & PANEL 15 55
SWITCH & PANEL 16 56
SWITCH & PANEL 17 57
SWITCH & PANEL 18 58
SWITCH & PANEL 19 60
SWITCH & PANEL 20 61
WIRE HARNESS 1 62
WIRE HARNESS 2 63
WIRE HARNESS 3 66
REMO CON ATTACHMENT 1 67
REMO CON ATTACHMENT 2 68
REMO CON ATTACHMENT 3 69
REMO CON ATTACHMENT 4 71
REMO CON ATTACHMENT 5 72
REMO CON ATTACHMENT 6 73
REMO CON ATTACHMENT 7 74
REMO CON ATTACHMENT 8 76
STEERING HOOK 1 77
STEERING HOOK 2 78
STEERING HOOK 3 79
STEERING GUIDE 1 80
STEERING GUIDE 2 81
STEERING GUIDE 3 82
STEERING GUIDE 4 83
STEERING GUIDE 5 84
STEERING GUIDE 6 85
STEERING GUIDE 7 86
STEERING GUIDE 8 87
STEERING GUIDE 9 88
STEERING GUIDE 10 89
STEERING GUIDE 11 90

INDEX

NUMERICAL INDEX 91

REMOTE CONTROL BOX SPECIFICATION LIST (703 TYPE)

TYPE : 703	MECHANICAL SPECIFICATION									
PART NO.	LIST UP SEC.	THROTTLE MOTION		HANDLE POSITION		NEUTRAL LOCK	TIGHTENING		LEVER TYPE	
	FIG.NO-REF.NO.	PULL	PUSH	RIGHT	LEFT		BOLT,NUT	ROUND WOOD SCREW	SINGLE	TWIN
703-48210-22	1-1	○	*	○	*	○	○	*	○	*
703-48230-22		○	*	○	*	○	○	*	○	*
703-48250-23		○	*	○	*	○	○	*	○	*
703-48272-23		○	*	○	*	○	○	*	○	*
703-48201-22		*	○	○	*	○	○	*	○	*
703-48201-B2		*	○	○	*	○	○	*	○	*
703-48203-22		*	○	○	*	○	○	*	○	*
703-48205-23		*	○	○	*	○	○	*	○	*
703-48205-B3		*	○	○	*	○	○	*	○	*
703-48207-23		*	○	○	*	○	○	*	○	*
703-48206-21	1-2	*	○	○	*	○	○	*	○	*
703-48260-21		○	*	○	*	○	○	*	○	*

REMOTE CONTROL BOX SPECIFICATION LIST (703 TYPE)

TYPE : 703	ELECTRICAL SPECIFICATION								
PART NO.	ENGINE STOP SW.		MAIN SWITCH		PT/T SW.	WIRE HARNESS COUPLER TYPE	BUZZER		NEUTRAL SW.
	PULL PLATE	PUSH BUTTON	CHOKE MODEL	PRIME START MODEL			ANALOG	DIGITAL	
703-48210-22	688-82575-02	*	703-82510-45	*	*	10P	703-83383-11	*	703-82540-00
703-48230-22	688-82575-02	*	703-82510-34	*	*	7P	703-83383-11	*	703-82540-00
703-48250-23	688-82575-02	*	703-82510-45	*	703-82563-31	10P	703-83383-11	*	703-82540-00
703-48272-23	688-82575-02	*	703-82510-45	*	703-82563-21	10P	703-83383-11	*	703-82540-00
703-48201-22	688-82575-02	*	703-82510-45	*	*	10P	703-83383-11	*	703-82540-00
703-48201-B2	688-82575-02	*	*	703-82510-14	*	10P	703-83383-11	*	703-82540-00
703-48203-22	688-82575-02	*	703-82510-34	*	*	7P	703-83383-11	*	703-82540-00
703-48205-23	688-82575-02	*	703-82510-45	*	703-82563-31	10P	703-83383-11	*	703-82540-00
703-48205-B3	688-82575-02	*	*	703-82510-14	703-82563-31	10P	703-83383-11	*	703-82540-00
703-48207-23	688-82575-02	*	703-82510-45	*	703-82563-21	10P	703-83383-11	*	703-82540-00
703-48206-21	701-82575-53	*	*	*	*	2P	*	*	*
703-48260-21	701-82575-53	*	*	*	*	2P	*	*	*

703 REMOTE CONTROL

Part No.	Throttle		Choke	PTT	Coupler			Mount		Remarks
	Push	Pull			7-pin	10-pin	2-pin	R	L	
703-48210-22		1	1			1		1		
703-48230-22		1	1		1			1		For analog gauge only
703-48250-23		1	1	1		1		1		
703-48272-23		1	1	1		1		1		For additional trim SW
703-48201-22	1		1			1		1		
703-48201-B2	1					1		1		
703-48203-22	1		1		1			1		For analog gauge only
703-48205-23	1		1	1		1		1		
703-48205-B3	1			1		1		1		
703-48207-23	1		1	1		1		1		For additional trim SW
703-48206-21	1						1	1		Successor model of 701 RC
703-48260-21		1					1	1		Successor model of 701 RC
703-48290-01	Twin attachment kit									For twin engine application

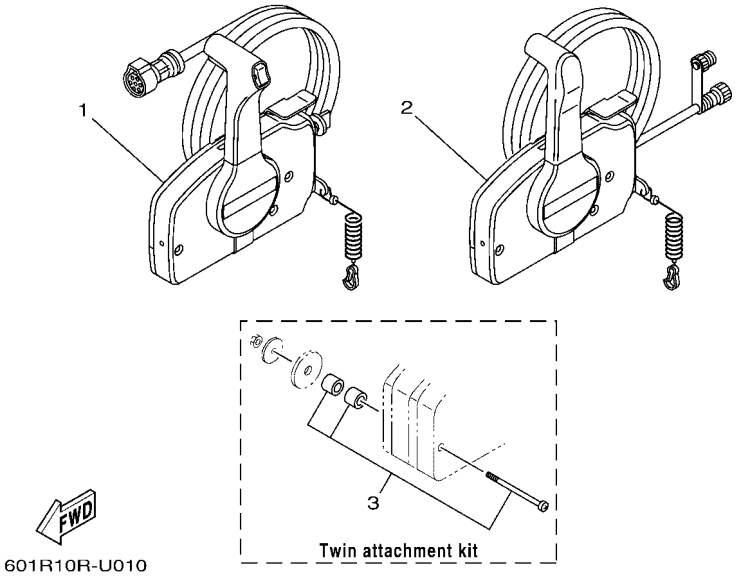

601R10R-U010

FIG. 1 REMOTE CONTROL BOX 1

REF. NO.	PART NO.	DESCRIPTION	601R					REMARKS
1	703–48210–22	REMOTE CONTROL ASSY (10P)	1					UR WITHOUT PT/T SW.
	703–48230–22	REMOTE CONTROL ASSY (7P)	1					UR WITHOUT PT/T SW.
	703–48250–23	REMOTE CONTROL ASSY (10P, PTT)	1					UR WITH PT/T SW.
	703–48272–23	REMOTE CONTROL ASSY (10P, PTT)	1					UR WITH PT/T SW.
	703–48201–22	REMOTE CONTROL ASSY (10P)	1					UR WITHOUT PT/T SW.
	703–48201–B2	REMOTE CONTROL ASSY (10P)	1					UR WITHOUT PT/T SW.
	703–48203–22	REMOTE CONTROL ASSY (7P)	1					UR WITHOUT PT/T SW.
	703–48205–23	REMOTE CONTROL ASSY (10P, PTT)	1					UR WITH PT/T SW.
	703–48205–B3	REMOTE CONTROL ASSY (10P, PTT)	1					UR WITH PT/T SW.
	703–48207–23	REMOTE CONTROL ASSY (10P, PTT)	1					UR WITH PT/T SW.
2	703–48206–21	REMOTE CONTROL ASSY	1					UR WITHOUT PT/T SW.
	703–48260–21	REMOTE CONTROL ASSY	1					UR WITHOUT PT/T SW.
3	703–48290–01	TWIN ATTACHMENT	1					FOR TWIN

REMOTE CONTROL BOX SPECIFICATION LIST (704 TYPE)

TYPE : 704	MECHANICAL SPECIFICATION								
TYPE : 704 (SINGLE)	LIST UP SEC.	HANDLE POSITION		SHIFT MOTION		THROTTLE MOTION		LEVER TYPE	
PART NO.	FIG.NO.-REF.NO.	RIGHT	LEFT	PULL	PUSH	PULL	PUSH	SINGLE	TWIN
704-48205-R1	2-1	*	○	○	*	*	○	○	*
704-48206-R1		○	*	○	*	*	○	○	*
TYPE : 704 (TWIN)	LIST UP SEC.	HANDLE POSITION		SHIFT MOTION		THROTTLE MOTION		LEVER TYPE	
PART NO.	FIG.NO.-REF.NO.	RIGHT	LEFT	PULL	PUSH	PULL	PUSH	SINGLE	TWIN
704-48207-R1	2-2	*	*	○	*	*	○	*	○

REMOTE CONTROL BOX SPECIFICATION LIST (704 TYPE)

TYPE : 704	ELECTRICAL SPECIFICATION					
TYPE : 704 (SINGLE)	PT/T SW.			NEUTRAL SW.	CABLE TERMINAL	
PART NO.	BODY SW.	BODY SW.	GRIP SW.		MM	INCH
704-48205-R1	*	*	704-82563-60	704-82540-40	*	○
704-48206-R1	*	*	704-82563-60	704-82540-40	*	○
TYPE : 704 (TWIN)	PT/T SW.			NEUTRAL SW.	CABLE TERMINAL	
PART NO.	BODY SW.	BODY SW.	GRIP SW.		MM	INCH
704-48207-R1	704-82563-80	704-82563-90	704-82563-70	704-82540-30	*	○

704 REMOTE CONTROL

Part No.	Throttle		PTT	Lever		
	Push	Pull		R	L	Twin
704-48205-R1	1		1		1	
704-48206-R1	1		1	1		
704-48207-R1	1		1			1

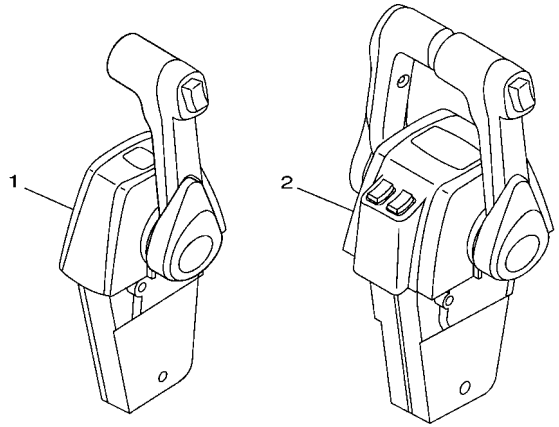

Part No.	Remarks
704-48293-40	Single
704-48293-50	Twin

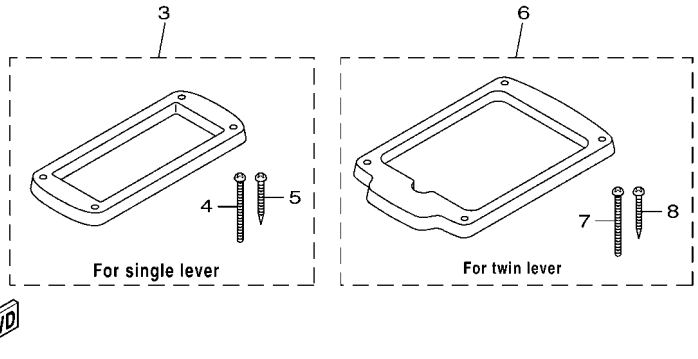

601R10R-U020

FIG. 2 REMOTE CONTROL BOX 2

REF. NO.	PART NO.	DESCRIPTION	601R					REMARKS
1	704–48205–R1	REMOTE CONTROL ASSY (R/H)	1					UR WITH PT/T SW.
	704–48206–R1	REMOTE CONTROL ASSY (L/H)	1					UR WITH PT/T SW.
2	704–48207–R1	REMOTE CONTROL ASSY	1					WITH PT/T SW.
3	704–48293–40	SPACER, REMOTE CONTROL	1					FOR SINGLE
4	98580–05060	.SCREW, PAN HEAD	4					
5	97780–50145	.SCREW, TAPPING	4					
6	704–48293–50	SPACER, REMOTE CONTROL	1					FOR TWIN
7	98580–05060	.SCREW, PAN HEAD	4					
8	97780–50145	.SCREW, TAPPING	4					

REMOTE CONTROL BOX SPECIFICATION LIST (6X3/6X5 TYPE)

SIDE MOUNT	MECHANICAL SPECIFICATION									
TYPE : 6X3 (SINGLE)	LIST UP SEC.	HANDLE POSITION		SHIFT MOTION		THROTTLE MOTION		LEVER TYPE		
PART NO.	FIG.NO.-REF.NO.	RIGHT	LEFT	PULL	PUSH	PULL	PUSH	SINGLE	TWIN	TRIPLE
6X3-48206-11	3-1	○	*	○	*	*	○	○	*	*
6X3-48206-22	3-2	*	○	○	*	*	○	○	*	*

TOP MOUNT	MECHANICAL SPECIFICATION									
TYPE : 6X5	LIST UP SEC.	HANDLE POSITION		SHIFT MOTION		THROTTLE MOTION		LEVER TYPE		
PART NO.	FIG.NO.-REF.NO.	RIGHT	LEFT	PULL	PUSH	PULL	PUSH	SINGLE	TWIN	TRIPLE
6X5-48207-03	3-3	○	*	*	○	○	*	*	*	○

REMOTE CONTROL BOX SPECIFICATION LIST (6X3/6X5 TYPE)

SIDE MOUNT	ELECTRICAL SPECIFICATION						
TYPE : 6X3 (SINGLE)	PT/T SW.				NEUTRAL SW.	CABLE TERMINAL	
PART NO.	BODY SW.	BODY SW.	BODY SW.	GRIP SW.		MM	INCH
6X3-48206-11	*	*	*	6X3-82563-02	704-82540-00	*	○
6X3-48206-22	*	*	*	6X3-82563-02	704-82540-00	*	○
TOP MOUNT	ELECTRICAL SPECIFICATION						
TYPE : 6X5	PT/T SW.				NEUTRAL SW.	CABLE TERMINAL	
PART NO.	BODY SW.	BODY SW.	BODY SW.	GRIP SW.		MM	INCH
6X5-48207-03	6X5-82563-12	6X5-82563-22	6X5-82563-32	6X5-82563-02	6X5-82540-00	*	○

6X3 REMOTE CONTROL

Part No.	Throttle		PTT	Mount		Remarks
	Push	Pull		R	L	
6X3-48206-11	1		1	1		With emergency shut-off cord (2-pin coupler)
6X3-48206-22	1		1		1	

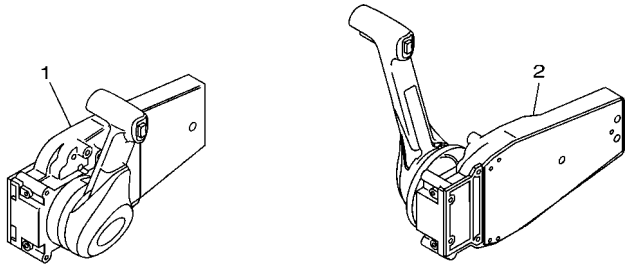

6X5 REMOTE CONTROL

Part No.	Throttle		PTT	Mount		Remarks
	Push	Pull		R	L	
6X5-48207-03	1		1	1		No wood tone

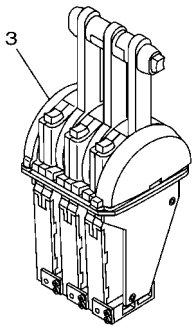

601R10R-U030

FIG. 3 REMOTE CONTROL BOX 3

REF. NO.	PART NO.	DESCRIPTION	601R					REMARKS
1	6X3–48206–11	REMOTE CONTROL ASSY	1					FOR RIGHT MOUNT WITH PT/T SW.
2	6X3–48206–22	REMOTE CONTROL ASSY	1					FOR LEFT MOUNT WITH PT/T SW.
3	6X5–48207–03	REMOTE CONTROL ASSY	1					WITH PT/T SW.

FIG. 4 REMOTE CONTROL ASSY 1

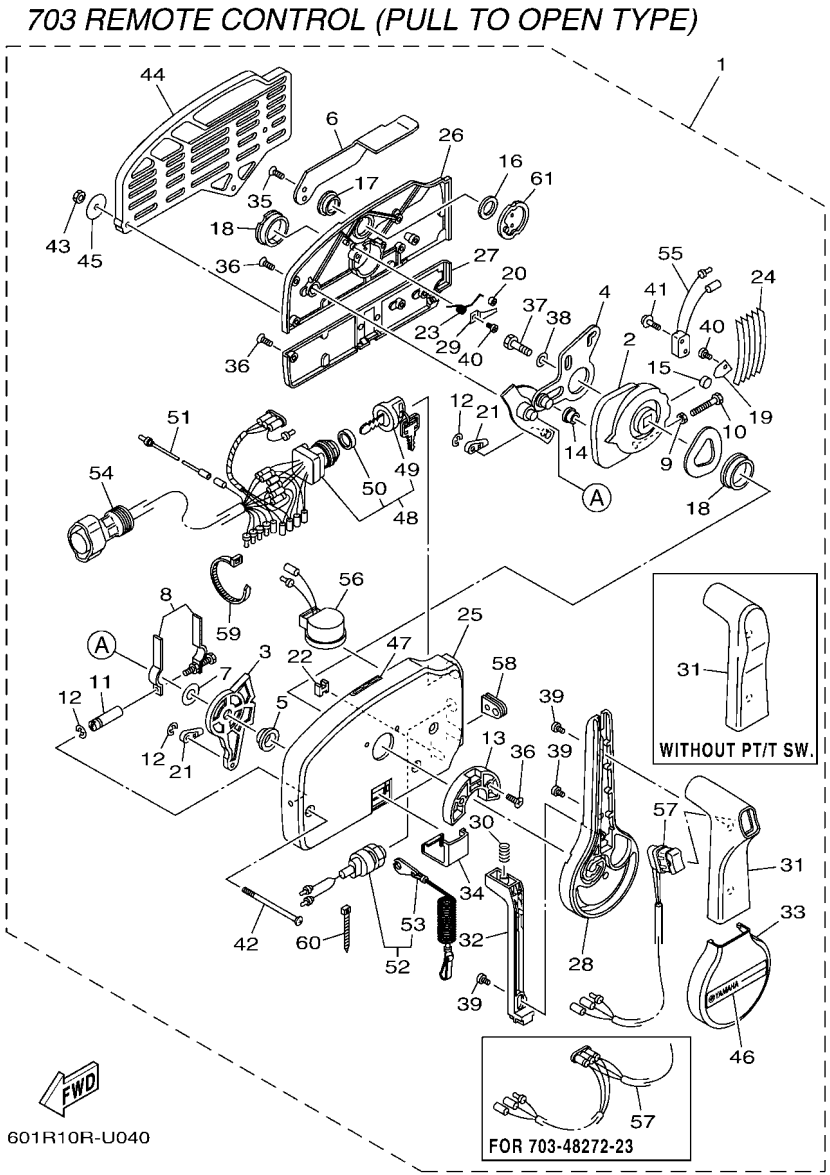

REF. NO.	PART NO.	DESCRIPTION	601R					REMARKS
1	703–48210–22	REMOTE CONTROL ASSY (10P)	1					UR WITHOUT PT/T SW.
	703–48230–22	REMOTE CONTROL ASSY (7P)	1					UR WITHOUT PT/T SW.
	703–48250–23	REMOTE CONTROL ASSY (10P, PTT)	1					UR WITH PT/T SW.
	703–48272–23	REMOTE CONTROL ASSY (10P, PTT)	1					UR WITH PT/T SW.
2	703–48232–00	.GEAR	1					
3	703–48271–00	.ARM, SHIFT	1					
4	703–48261–11	.ARM, THROTTLE	1					
5	703–48235–00	.BUSHING	1					
6	703–48152–10	.KNOB, FREE ACCEL.	1					
7	703–48268–00	.SPACER	1					
8	703–48264–00	.FRICTION, THROTTLE	1					
9	95380–05600	.NUT	1					
10	97380–05025	.BOLT	1					
11	703–48265–10	.SHAFT, FRICTION	1					
12	93430–06024	.CIRCLIP	3					
13	703–48245–00	.PLATE, LOCK	1					
14	703–48252–00	.ROLLER, CAM	1					
15	701–48248–00	.ROLLER, FREE ACCEL.	1					
16	703–48198–00	.WASHER, WAVE	1					
17	703–48243–00	.BUSHING	1					
18	703–48236–00	.BUSHING 1	2					
19	703–48189–00	.RETAINER	1					
20	703–48234–00	.ROLLER, DETENT	1					
21	703–48345–01	.CABLE END, REMOTE CONTROL 2	2					
22	703–48358–01	.ANCHOR, CABLE	1					
23	703–48244–00	.SPRING, FREE ACCEL.	1					
24	703–48238–00	.SPRING, DETENT	5					

703 REMOTE CONTROL (PULL TO OPEN TYPE)

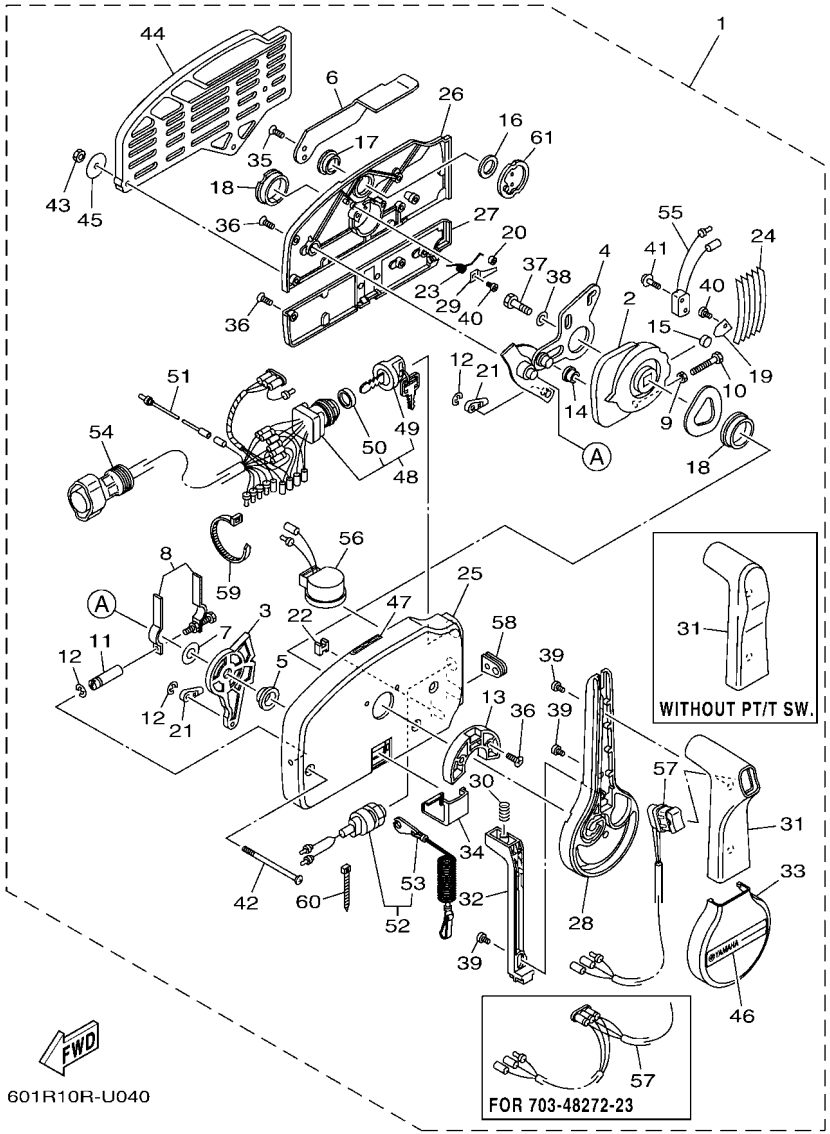

FIG. 4 REMOTE CONTROL ASSY 1

REF. NO.	PART NO.	DESCRIPTION	601R					REMARKS
25	703–48211–10	.HOUSING,1	1					
26	703–48212–10	.BACK PLATE 1	1					
27	703–48213–10	.BACK PLATE 2	1					
28	703–48221–10	.LEVER, CONTROL	1					
29	703–48246–00	.SPACER	1					
30	703–48227–00	.SPRING, NEUTRAL LOCK	1					
31	703–48222–20	.GRIP, CONTROL LEVER	1					WITH PT/T SW.
	703–48222–30	.GRIP, CONTROL LEVER	1					WITHOUT PT/T SW.
32	703–48223–10	.LOCK, NEUTRAL	1					
33	703–48225–10	.COVER	1					
34	703–48219–10	.COVER, LEAD	1					
35	703–48281–00	.SCREW	2					
36	703–44189–20	.SCREW	7					
37	97380–08030	.BOLT	1					
38	92990–08600	.WASHER, PLATE	1					
39	703–48128–10	.SCREW 2	3					
40	98580–04006	.SCREW, PAN HEAD	2					
41	703–48129–00	.SCREW 3	2					
42	703–44189–30	.SCREW	3					
43	95380–06600	.NUT, HEXAGON	3					
44	703–48293–10	.SPACER, REMOTE CONTROL	1					SINGLE
45	701–48287–00	.WASHER	3					
46	703–48215–11	.GRAPHIC	1					
47	6X3–44191–00	.INDICATOR, SHIFT	1					
48	703–82510–45	.MAIN SWITCH ASSY	1					EXCEPT 703-48230-22
	703–82510–34	.MAIN SWITCH ASSY	1					FOR 703-48230-22
49	703–82577–00	..CAP, KEY	1					

703 REMOTE CONTROL (PULL TO OPEN TYPE)

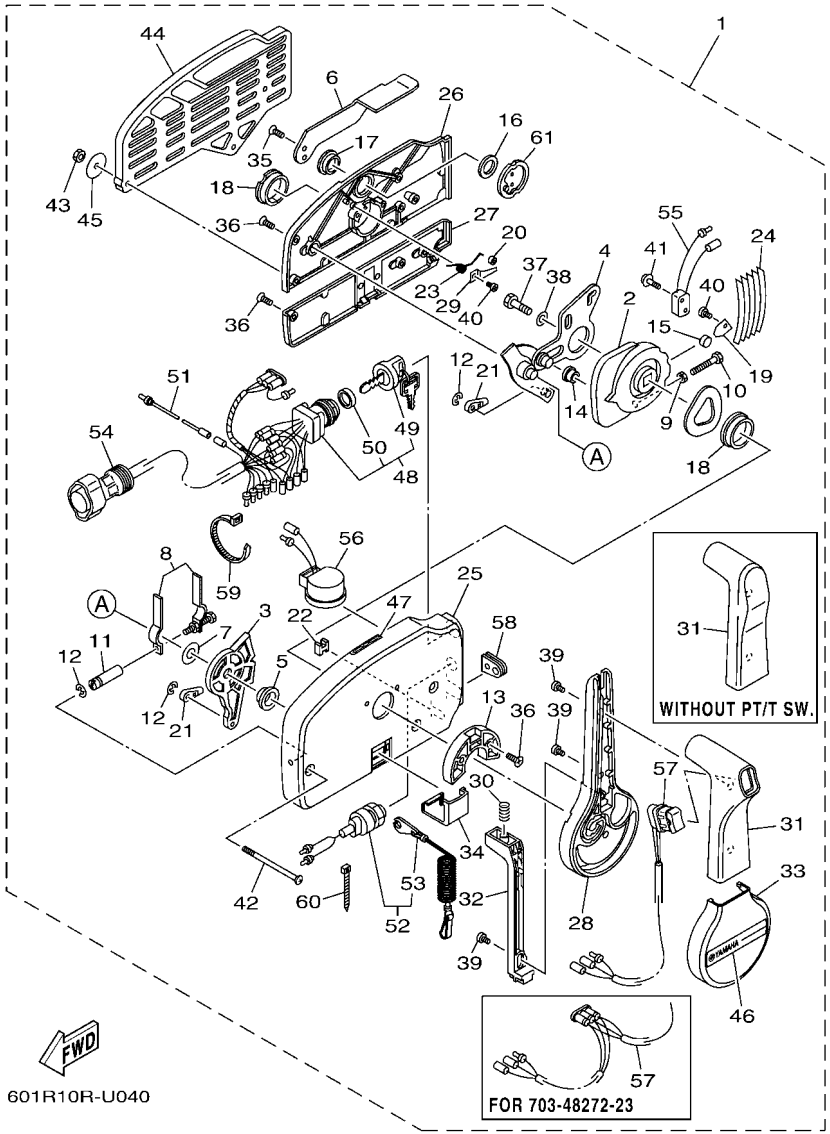

FIG. 4 REMOTE CONTROL ASSY 1

REF. NO.	PART NO.	DESCRIPTION	601R					REMARKS
50	6K1–82532–00	..CAP	1					
51	703–82531–00	.WIRE, LEAD (L70)	1					
52	688–82575–02	.ENGINE STOP SWITCH ASSY	1					
53	682–82556–00	..LANYARD, STOP SWITCH	1					
54	688–8258A–20	.EXTENSION, WIRE HARNESS (4.9M)	1					EXCEPT 703-48230-22 (10P)
	688–82586–21	.EXTENSION, WIRE HARNESS (4.9M)	1					FOR 703-48230-22 (7P)
55	703–82540–00	.NEUTRAL SWITCH ASSY	1					
56	703–83383–11	.BUZZER	1					
57	703–82563–31	.TRIM & TILT SWITCH ASSY	1					FOR 703-48250-23
	703–82563–21	.TRIM & TILT SWITCH ASSY	1					FOR 703-48272-23
58	703–48284–00	.GROMMET	1					EXCEPT 703-48272-23
	703–48284–10	.GROMMET	1					FOR 703-48272-23
59	703–82591–00	.BAND	1					
60	703–82592–00	.BAND	1					
61	703–48153–00	.SHAFT, FREE ACCEL.	1					

FIG. 5 REMOTE CONTROL ASSY 2

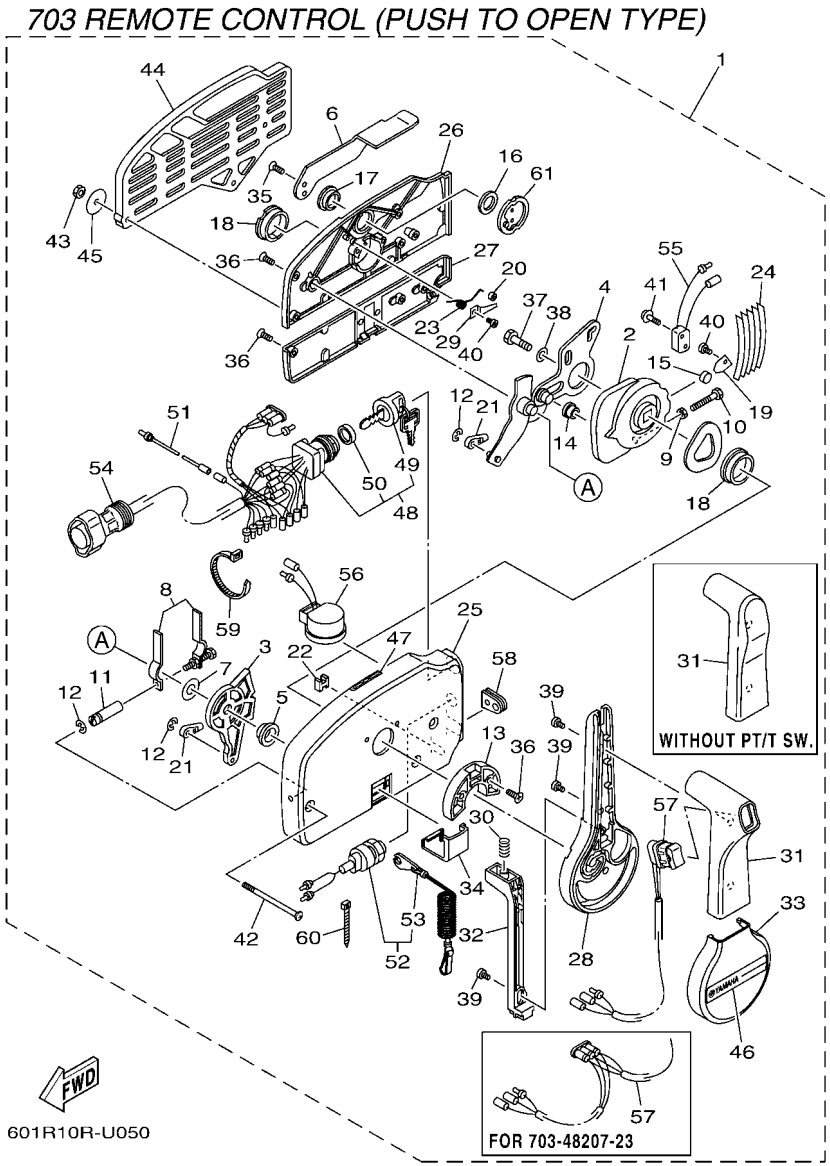

*1: FOR 703-48201-22/ 703-48205-23/ 703-48207-23
*2: FOR 703-48201-B2/ 703-48205-B3

REF. NO.	PART NO.	DESCRIPTION	601R					REMARKS
1	703–48201–22	REMOTE CONTROL ASSY (10P)	1					UR WITHOUT PT/T SW.
	703–48201–B2	REMOTE CONTROL ASSY (10P)	1					UR WITHOUT PT/T SW.
	703–48203–22	REMOTE CONTROL ASSY (7P)	1					UR WITHOUT PT/T SW.
	703–48205–23	REMOTE CONTROL ASSY (10P, PTT)	1					UR WITH PT/T SW.
	703–48205–B3	REMOTE CONTROL ASSY (10P, PTT)	1					UR WITH PT/T SW.
	703–48207–23	REMOTE CONTROL ASSY (10P, PTT)	1					UR WITH PT/T SW.
2	703–48232–00	.GEAR	1					
3	703–48271–00	.ARM, SHIFT	1					
4	703–48261–01	.ARM, THROTTLE	1					
5	703–48235–00	.BUSHING	1					
6	703–48152–10	.KNOB, FREE ACCEL.	1					
7	703–48268–00	.SPACER	1					
8	703–48264–00	.FRICTION, THROTTLE	1					
9	95380–05600	.NUT	1					
10	97380–05025	.BOLT	1					
11	703–48265–10	.SHAFT, FRICTION	1					
12	93430–06024	.CIRCLIP	3					
13	703–48245–00	.PLATE, LOCK	1					
14	703–48252–00	.ROLLER, CAM	1					
15	701–48248–00	.ROLLER, FREE ACCEL.	1					
16	703–48198–00	.WASHER, WAVE	1					
17	703–48243–00	.BUSHING	1					
18	703–48236–00	.BUSHING 1	2					
19	703–48189–00	.RETAINER	1					
20	703–48234–00	.ROLLER, DETENT	1					
21	703–48345–01	.CABLE END, REMOTE CONTROL 2	2					
22	703–48358–01	.ANCHOR, CABLE	1					

703 REMOTE CONTROL (PUSH TO OPEN TYPE)

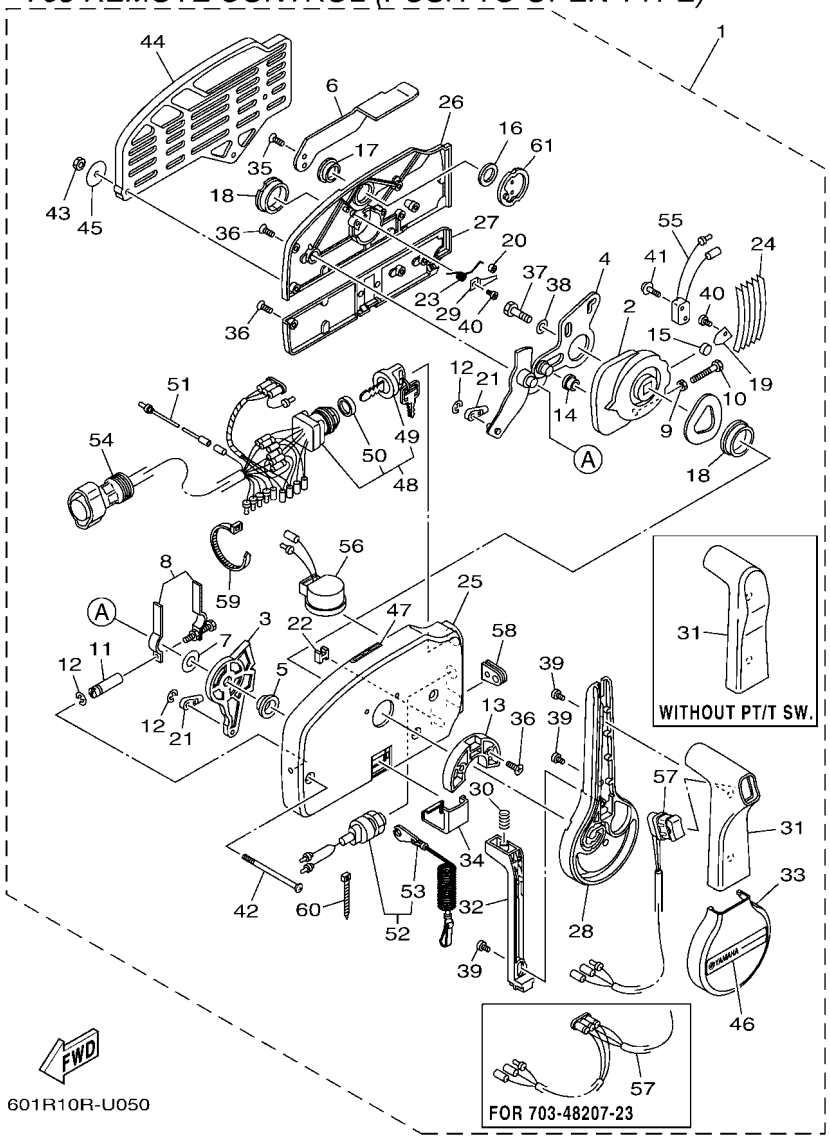

*1: FOR 703-48201-22/ 703-48205-23/ 703-48207-23
*2: FOR 703-48201-B2/ 703-48205-B3

FIG. 5 REMOTE CONTROL ASSY 2

REF. NO.	PART NO.	DESCRIPTION	601R					REMARKS
23	703–48244–00	.SPRING, FREE ACCEL.	1					
24	703–48238–00	.SPRING, DETENT	5					
25	703–48211–10	.HOUSING,1	1					
26	703–48212–10	.BACK PLATE 1	1					
27	703–48213–10	.BACK PLATE 2	1					
28	703–48221–10	.LEVER, CONTROL	1					
29	703–48246–00	.SPACER	1					
30	703–48227–00	.SPRING, NEUTRAL LOCK	1					
31	703–48222–20	.GRIP, CONTROL LEVER	1					WITH PT/T SW.
	703–48222–30	.GRIP, CONTROL LEVER	1					WITHOUT PT/T SW.
32	703–48223–10	.LOCK, NEUTRAL	1					
33	703–48225–10	.COVER	1					
34	703–48219–10	.COVER, LEAD	1					
35	703–48281–00	.SCREW	2					
36	703–44189–20	.SCREW	7					
37	97380–08030	.BOLT	1					
38	92990–08600	.WASHER, PLATE	1					
39	703–48128–10	.SCREW 2	3					
40	98580–04006	.SCREW, PAN HEAD	2					
41	703–48129–00	.SCREW 3	2					
42	703–44189–30	.SCREW	3					
43	95380–06600	.NUT, HEXAGON	3					
44	703–48293–10	.SPACER, REMOTE CONTROL	1					SINGLE
45	701–48287–00	.WASHER	3					
46	703–48215–11	.GRAPHIC	1					
47	6X3–44191–00	.INDICATOR, SHIFT	1					
48	703–82510–45	.MAIN SWITCH ASSY	1					*1

703 REMOTE CONTROL (PUSH TO OPEN TYPE)

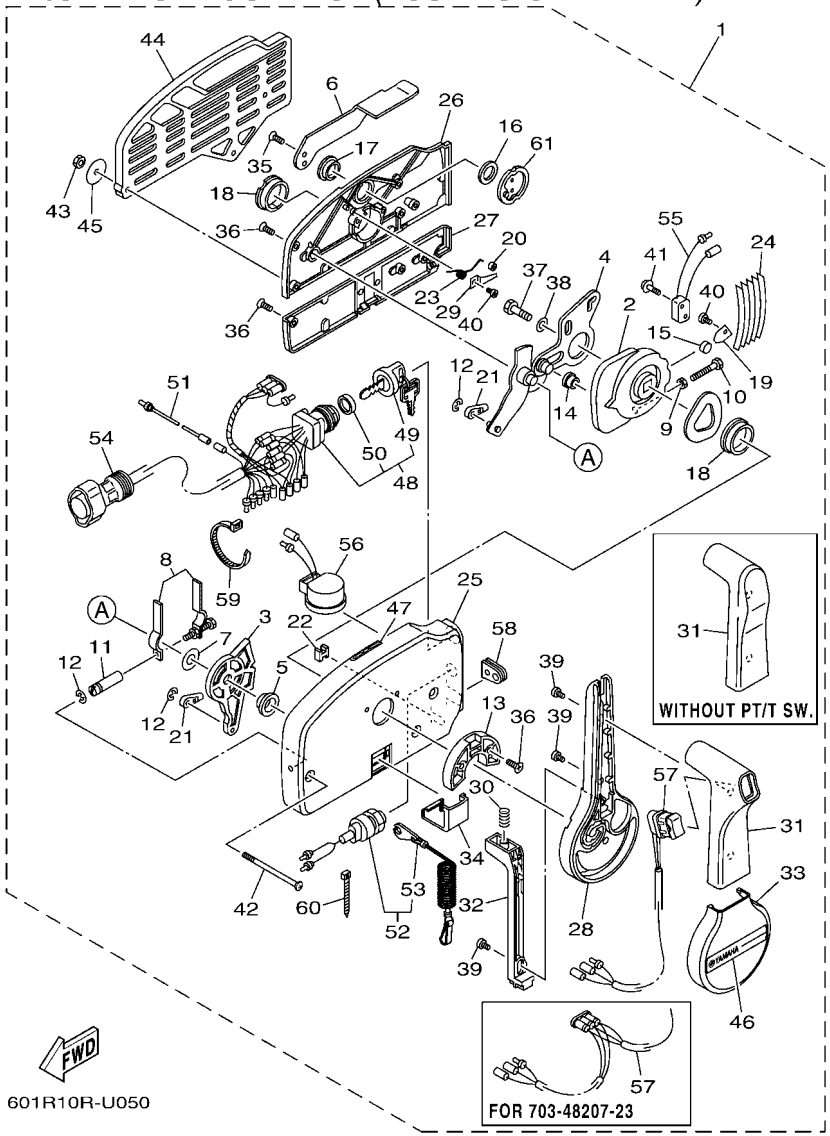

*1: FOR 703-48201-22/ 703-48205-23/ 703-48207-23
*2: FOR 703-48201-B2/ 703-48205-B3

FIG. 5 REMOTE CONTROL ASSY 2

REF. NO.	PART NO.	DESCRIPTION	601R					REMARKS
48	703–82510–14	.MAIN SWITCH ASSY	1					*2
	703–82510–34	.MAIN SWITCH ASSY	1					FOR 703-48203-22
49	703–82577–00	..CAP, KEY	1					FOR 703-82510-45/34
	676–82577–01	..CAP, KEY	1					FOR 703-82510-14
50	6K1–82532–00	..CAP	1					FOR 703-82510-45/34
	703–82532–00	..CAP	1					FOR 703-82510-14
51	703–82531–00	.WIRE, LEAD (L70)	1					
52	688–82575–02	.ENGINE STOP SWITCH ASSY	1					
53	682–82556–00	..LANYARD, STOP SWITCH	1					
54	688–8258A–20	.EXTENSION, WIRE HARNESS (4.9M)	1					EXCEPT 703-48203-22 (10P)
	688–82586–21	.EXTENSION, WIRE HARNESS (4.9M)	1					FOR 703-48203-22 (7P)
55	703–82540–00	.NEUTRAL SWITCH ASSY	1					
56	703–83383–11	.BUZZER	1					
57	703–82563–31	.TRIM & TILT SWITCH ASSY	1					FOR 703-48205-23/B3
	703–82563–21	.TRIM & TILT SWITCH ASSY	1					FOR 703-48207-23
58	703–48284–00	.GROMMET	1					EXCEPT 703-48207-23
	703–48284–10	.GROMMET	1					FOR 703-48207-23
59	703–82591–00	.BAND	1					
60	703–82592–00	.BAND	1					
61	703–48153–00	.SHAFT, FREE ACCEL.	1					

703 REMOTE CONTROL
Successor model of 701 REMOTE CONTROL

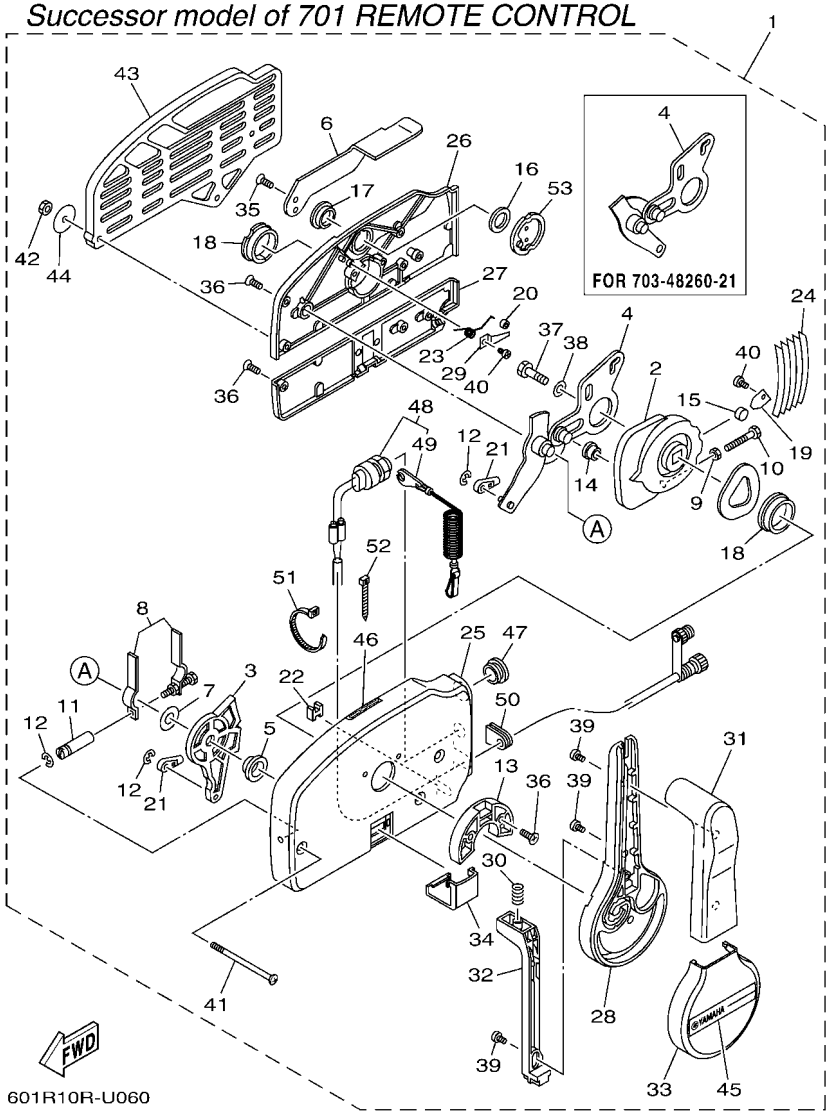

FIG. 6 REMOTE CONTROL ASSY 3

REF. NO.	PART NO.	DESCRIPTION	601R					REMARKS
1	703–48206–21	REMOTE CONTROL ASSY	1					UR WITHOUT PT/T SW.
	703–48260–21	REMOTE CONTROL ASSY	1					UR WITHOUT PT/T SW.
2	703–48232–00	.GEAR	1					
3	703–48271–00	.ARM, SHIFT	1					
4	703–48261–01	.ARM, THROTTLE	1					FOR 703-48206-21
	703–48261–11	.ARM, THROTTLE	1					FOR 703-48260-21
5	703–48235–00	.BUSHING	1					
6	703–48152–10	.KNOB, FREE ACCEL.	1					
7	703–48268–00	.SPACER	1					
8	703–48264–00	.FRICTION, THROTTLE	1					
9	95380–05600	.NUT	1					
10	97380–05025	.BOLT	1					
11	703–48265–00	.SHAFT, FRICTION	1					
12	93430–06024	.CIRCLIP	3					
13	703–48245–00	.PLATE, LOCK	1					
14	703–48252–00	.ROLLER, CAM	1					
15	701–48248–00	.ROLLER, FREE ACCEL.	1					
16	703–48198–00	.WASHER, WAVE	1					
17	703–48243–00	.BUSHING	1					
18	703–48236–00	.BUSHING 1	2					
19	703–48189–00	.RETAINER	1					
20	703–48234–00	.ROLLER, DETENT	1					
21	703–48345–01	.CABLE END, REMOTE CONTROL 2	2					
22	703–48358–01	.ANCHOR, CABLE	1					
23	703–48244–00	.SPRING, FREE ACCEL.	1					
24	703–48238–00	.SPRING, DETENT	5					
25	703–48211–10	.HOUSING,1	1					

703 REMOTE CONTROL
Successor model of 701 REMOTE CONTROL

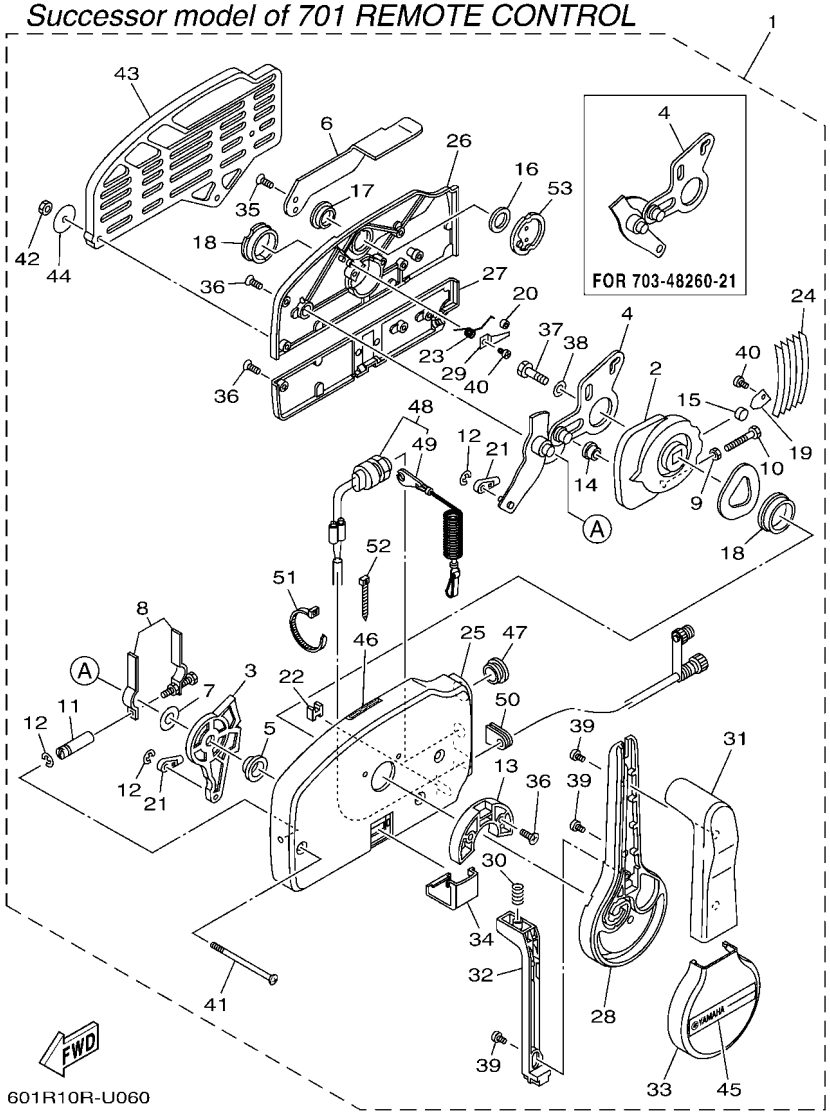

FIG. 6 REMOTE CONTROL ASSY 3

REF. NO.	PART NO.	DESCRIPTION	601R					REMARKS
26	703–48212–10	.BACK PLATE 1	1					
27	703–48213–10	.BACK PLATE 2	1					
28	703–48221–10	.LEVER, CONTROL	1					
29	703–48246–00	.SPACER	1					
30	703–48227–00	.SPRING, NEUTRAL LOCK	1					
31	703–48222–30	.GRIP, CONTROL LEVER	1					WITHOUT PT/T SW.
32	703–48223–10	.LOCK, NEUTRAL	1					
33	703–48225–10	.COVER	1					
34	703–48219–10	.COVER, LEAD	1					
35	703–48281–00	.SCREW	2					
36	703–44189–20	.SCREW	7					
37	97380–08030	.BOLT	1					
38	92990–08600	.WASHER, PLATE	1					
39	703–48128–10	.SCREW 2	3					
40	98580–04006	.SCREW, PAN HEAD	2					
41	703–44189–30	.SCREW	3					
42	95380–06600	.NUT, HEXAGON	3					
43	703–48293–10	.SPACER, REMOTE CONTROL	1					SINGLE
44	701–48287–00	.WASHER	3					
45	703–48215–11	.GRAPHIC	1					
46	6X3–44191–00	.INDICATOR, SHIFT	1					
47	703–48138–00	.CAP, LOCK ARM	1					
48	701–82575–53	.ENGINE STOP SWITCH ASSY	1					
49	682–82556–00	..LANYARD, STOP SWITCH	1					
50	703–48284–20	.GROMMET	1					
51	703–82591–00	.BAND	1					
52	703–82592–00	.BAND	1					

703 REMOTE CONTROL
Successor model of 701 REMOTE CONTROL

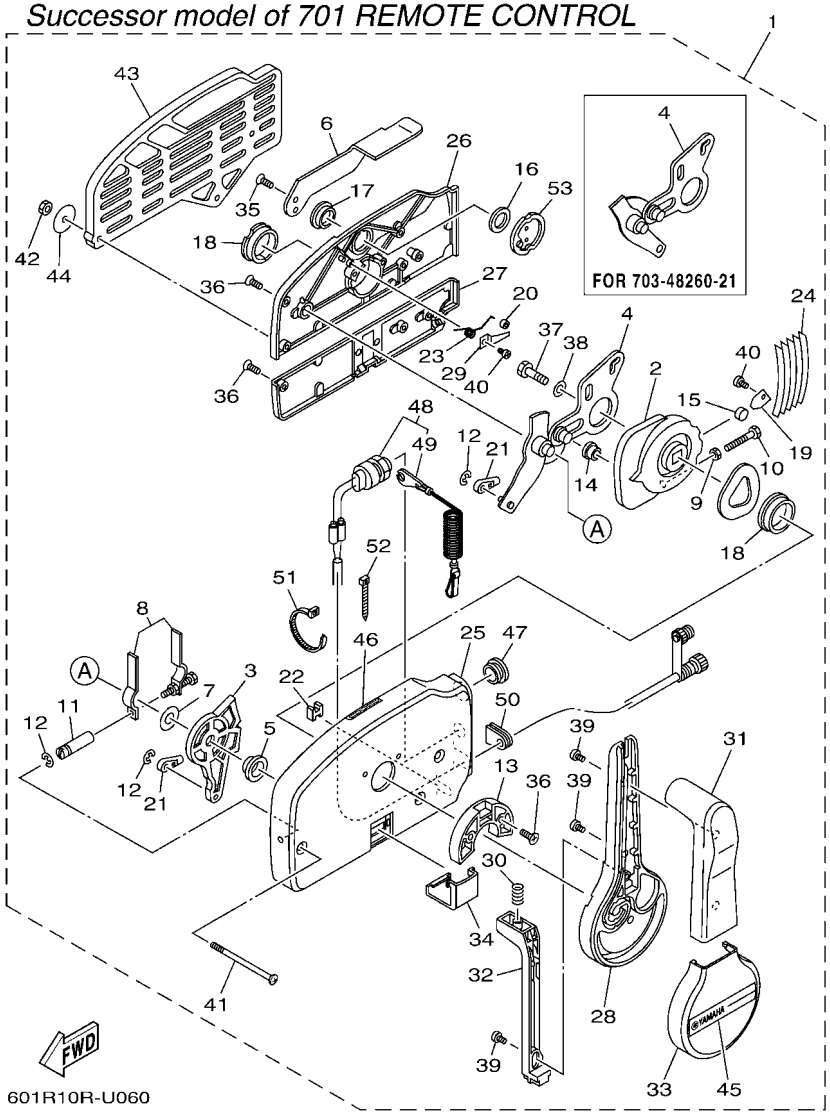

FIG. 6 REMOTE CONTROL ASSY 3

REF. NO.	PART NO.	DESCRIPTION	601R					REMARKS
53	703–48153–00	.SHAFT, FREE ACCEL.	1					

FIG. 7 REMOTE CONTROL ASSY 4

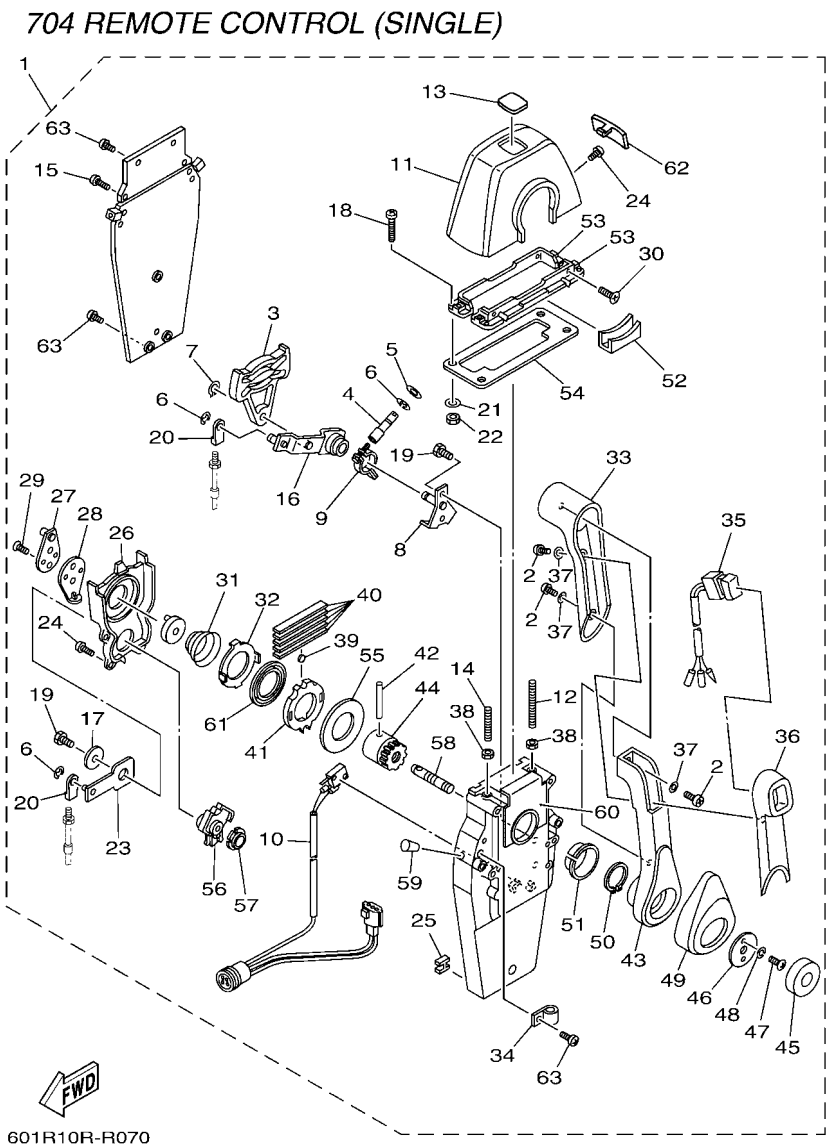

REF. NO.	PART NO.	DESCRIPTION	601R					REMARKS
1	704–48205–R1	REMOTE CONTROL ASSY (R/H)	1					UR FOR SINGLE WITH PT/T SW.
	704–48206–R1	REMOTE CONTROL ASSY (L/H)	1					UR FOR SINGLE WITH PT/T SW.
2	704–48129–11	.SCREW 3	3					
3	EL8–48251–00	.PLATE, CAM	1					
4	704–48265–00	.SHAFT, FRICTION	1					
5	701–48246–00	.SPACER	1					
6	93430–06024	.CIRCLIP	4					
7	EL8–48259–00	.CIRCLIP 1	1					
8	704–48262–00	.SHAFT, THROTTLE	1					
9	704–48264–00	.THROTTLE, FRICTION	1					
10	704–82540–40	.NEUTRAL SWITCH ASSY	1					
11	704–48119–50	.COVER	1					
12	EL8–48281–00	.SCREW	1					
13	704–48215–60	.GRAPHIC	1					
14	704–48281–00	.SCREW	1					
15	97890–05025	.SCREW, PAN HEAD	2					
16	704–48261–00	.ARM, THROTTLE	1					
17	EL8–48191–00	.WASHER 1	1					
18	704–48283–00	.SCREW	4					
19	97380–06018	.BOLT	3					
20	703–48345–01	.CABLE END, REMOTE CONTROL 2	2					
21	704–48287–00	.WASHER	4					
22	95380–05600	.NUT	4					
23	704–48271–00	.ARM, SHIFT	1					
24	EL8–48127–00	.SCREW 1	10					
25	703–48358–01	.ANCHOR, CABLE	1					
26	704–48231–00	.HOUSING, GEAR	1					

704 REMOTE CONTROL (SINGLE)

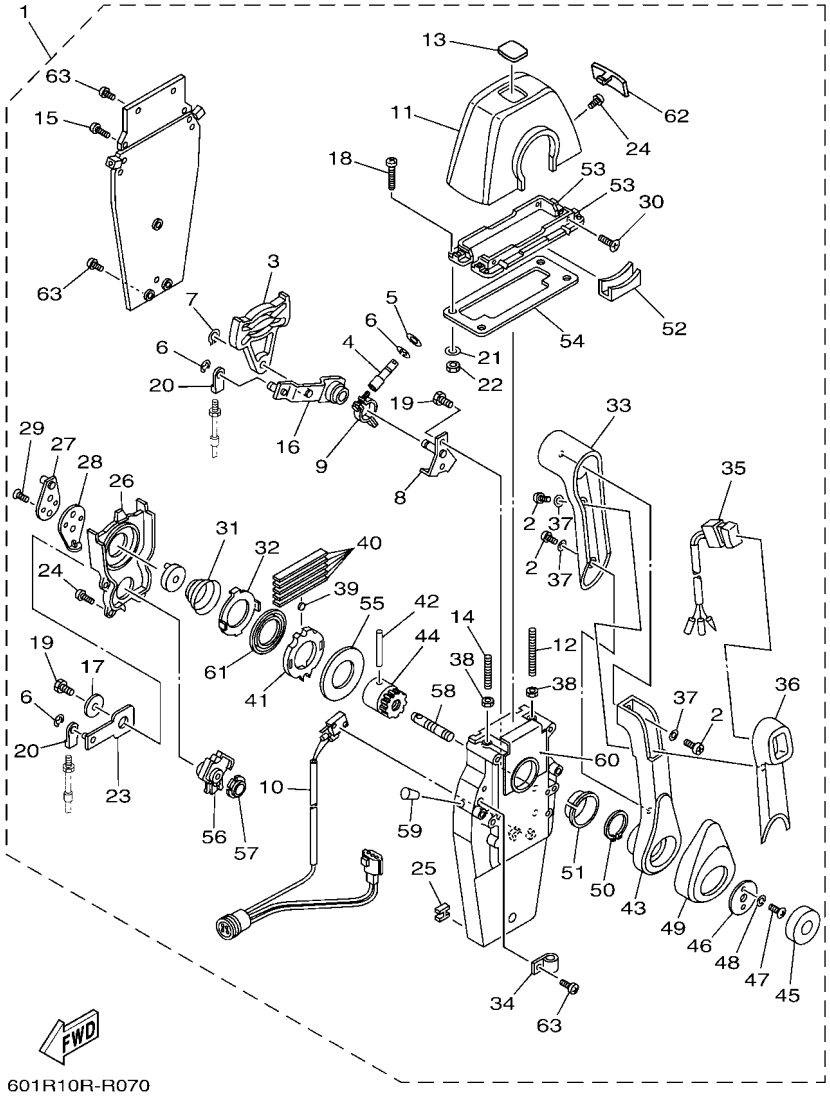

601R10R-R070

FIG. 7 REMOTE CONTROL ASSY 4

REF. NO.	PART NO.	DESCRIPTION	601R					REMARKS
27	EL8–48241–00	.ARM, DRIVE	1					
28	EL8–48254–00	.STOPPER, THROTTLE ADJUSTING	1					
29	92780–06020	.SCREW, FLAT HEAD	2					
30	98780–05018	.SCREW, FLAT HEAD	4					
31	EL8–48244–00	.SPRING, FREE ACCEL.	1					
32	EL8–48245–00	.PLATE, LOCK	1					
33	704–48222–10	.GRIP, CONTROL LEVER	1					
34	704–82594–00	.CLAMP	1					
35	704–82563–60	.TRIM & TILT SWITCH ASSY	1					
36	704–48229–30	.GRIP, CONTROL LEVER	1					
37	92990–05300	.WASHER, INTERNAL TOOTH	3					
38	95380–06600	.NUT, HEXAGON	2					
39	701–48248–00	.ROLLER, FREE ACCEL.	1					
40	704–48238–00	.SPRING, DETENT	5					
41	704–48232–P1	.GEAR	1					
42	EL8–48164–00	.PIN 2	1					
43	704–48221–R0	.LEVER, CONTROL	1					
44	704–48242–10	.SHAFT, DRIVE	1					
45	704–48225–R0	.COVER	1					
46	704–48192–00	.WASHER 2	1					
47	97890–06018	.SCREW, PAN HEAD	2					
48	92990–06300	.WASHER, INTERNAL TOOTH	2					
49	704–48224–R0	.COVER, CONTROL LEVER	1					
50	EL8–48279–00	.CIRCLIP 2	1					
51	704–48234–00	.BUSHING 1	1					
52	704–48219–R0	.COVER, LEAD	1					
53	704–48144–10	.PLATE, STOPPER 2	2					

704 REMOTE CONTROL (SINGLE)

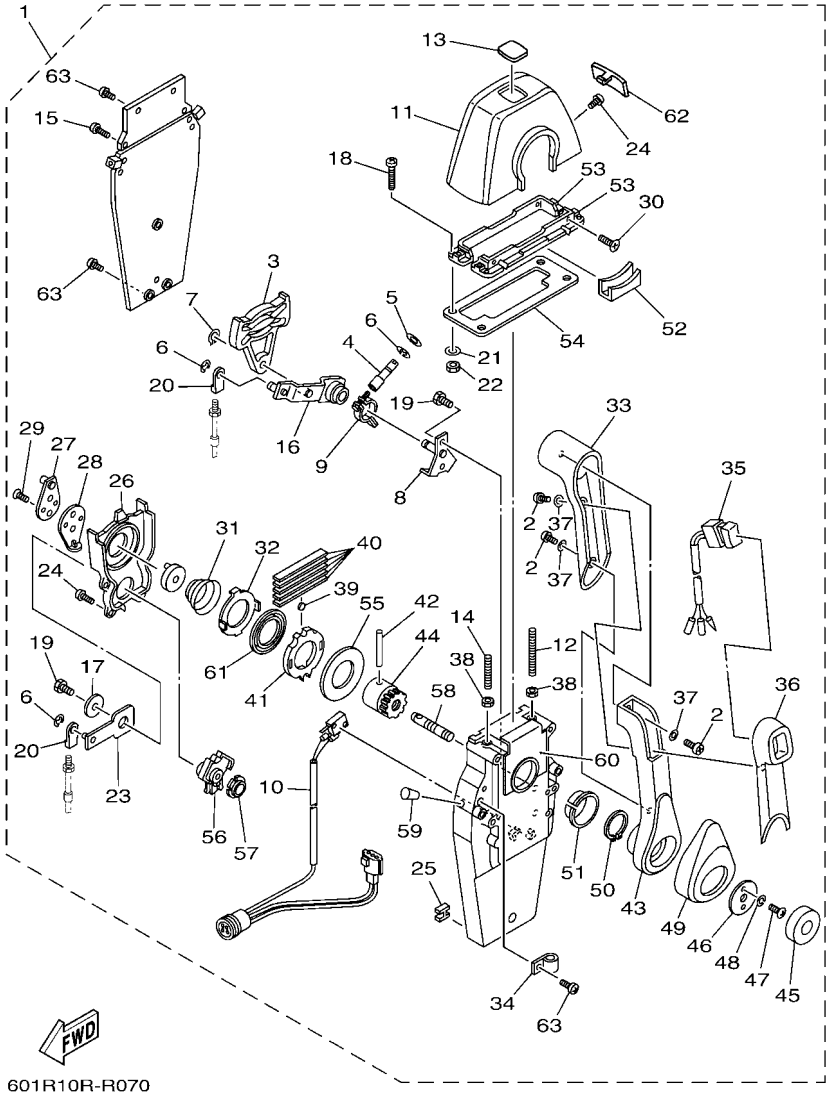

601R10R-R070

FIG. 7 REMOTE CONTROL ASSY 4

REF. NO.	PART NO.	DESCRIPTION	601R					REMARKS
54	704–48176–00	.GROMMET	1					
55	704–48192–P0	.WASHER 2	1					
56	704–48233–00	.GEAR 2	1					
57	704–48235–00	.BUSHING	1					
58	704–48153–00	.SHAFT, FREE ACCEL.	1					
59	704–48166–00	.PLUG	1					
60	704–48284–P0	.GROMMET	1					
61	704–48178–10	.PLATE, SHIFT	1					
62	704–48167–20	.PLUG	1					
63	97890–05016	.SCREW, PAN HEAD	3					

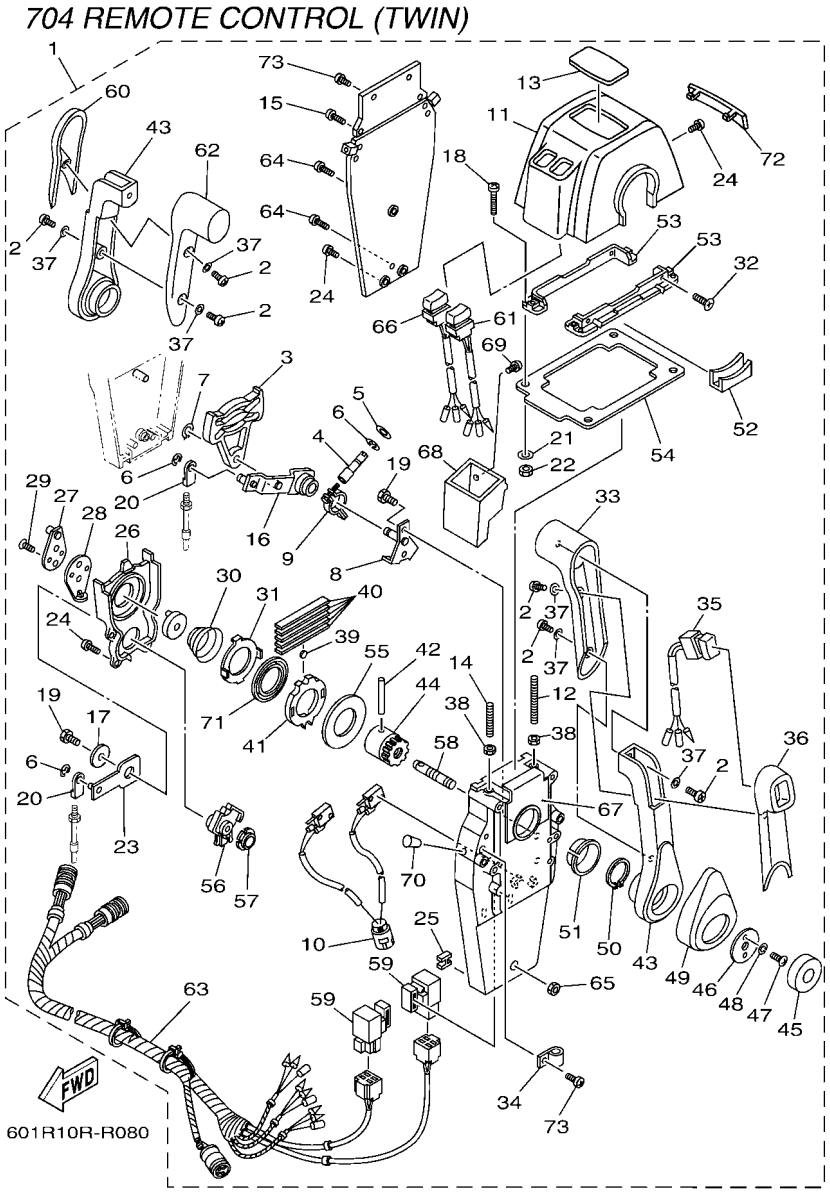

FIG. 8 REMOTE CONTROL ASSY 5

REF. NO.	PART NO.	DESCRIPTION	601R					REMARKS
1	704–48207–R1	REMOTE CONTROL ASSY	1					FOR TWIN WITH PT/T SW.
2	704–48129–11	.SCREW 3	6					
3	EL8–48251–00	.PLATE, CAM	2					
4	704–48265–00	.SHAFT, FRICTION	2					
5	701–48246–00	.SPACER	2					
6	93430–06024	.CIRCLIP	8					
7	EL8–48259–00	.CIRCLIP 1	2					
8	704–48262–00	.SHAFT, THROTTLE	2					
9	704–48264–00	.THROTTLE, FRICTION	2					
10	704–82540–30	.NEUTRAL SWITCH ASSY	1					
11	704–48119–60	.COVER	1					
12	EL8–48281–00	.SCREW	2					
13	704–48215–70	.GRAPHIC	1					
14	704–48281–00	.SCREW	2					
15	97890–05025	.SCREW, PAN HEAD	4					
16	704–48261–00	.ARM, THROTTLE	2					
17	EL8–48191–00	.WASHER 1	2					
18	704–48283–00	.SCREW	4					
19	97380–06018	.BOLT	6					
20	703–48345–01	.CABLE END, REMOTE CONTROL 2	4					
21	704–48287–00	.WASHER	4					
22	95380–05600	.NUT	4					
23	704–48271–00	.ARM, SHIFT	2					
24	EL8–48127–00	.SCREW 1	18					
25	703–48358–01	.ANCHOR, CABLE	2					
26	704–48231–00	.HOUSING, GEAR	2					
27	EL8–48241–00	.ARM, DRIVE	2					

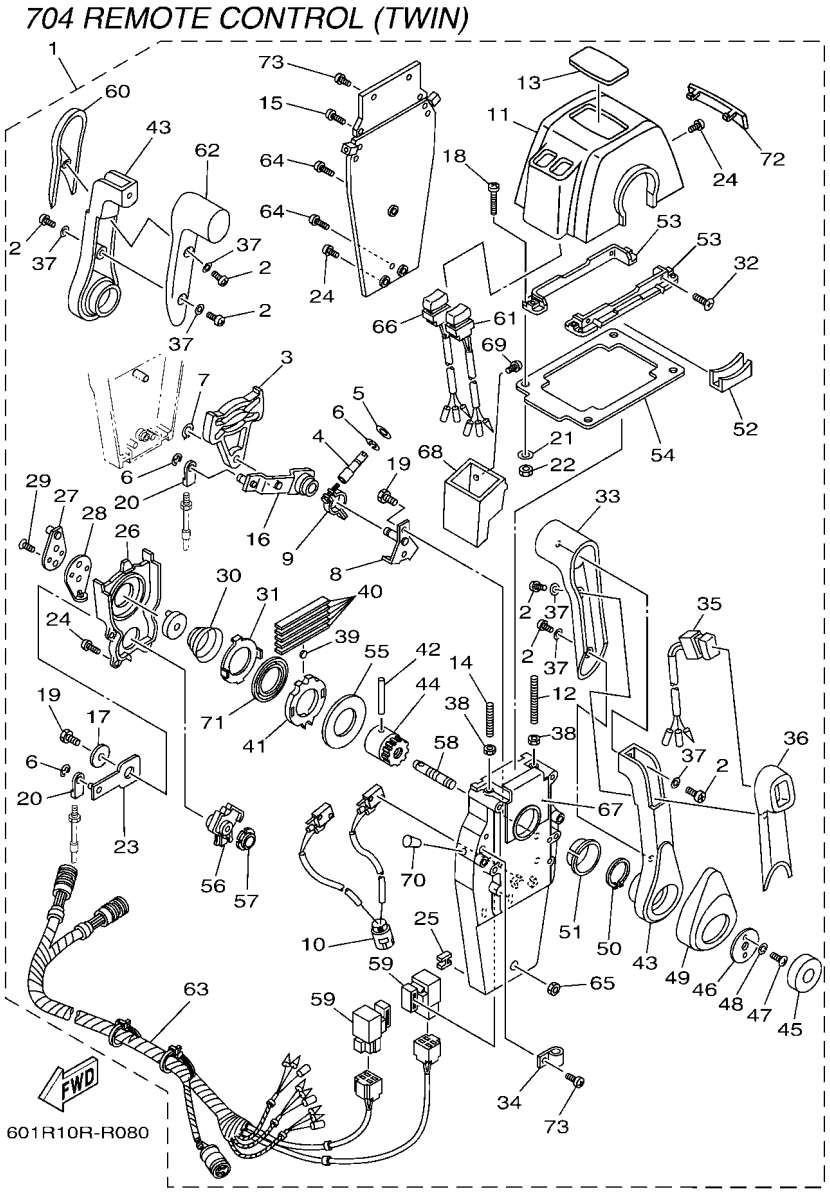

FIG. 8 REMOTE CONTROL ASSY 5

REF. NO.	PART NO.	DESCRIPTION	601R					REMARKS
28	EL8–48254–00	.STOPPER, THROTTLE ADJUSTING	2					
29	92780–06020	.SCREW, FLAT HEAD	4					
30	EL8–48244–00	.SPRING, FREE ACCEL.	2					
31	EL8–48245–00	.PLATE, LOCK	2					
32	98780–05018	.SCREW, FLAT HEAD	4					
33	704–48222–30	.GRIP, CONTROL LEVER	2					
34	704–82594–00	.CLAMP	1					
35	704–82563–70	.TRIM & TILT SWITCH ASSY	1					
36	704–48229–30	.GRIP, CONTROL LEVER	1					
37	92990–05300	.WASHER, INTERNAL TOOTH	6					
38	95380–06600	.NUT, HEXAGON	4					
39	701–48248–00	.ROLLER, FREE ACCEL.	2					
40	704–48238–00	.SPRING, DETENT	10					
41	704–48232–P1	.GEAR	2					
42	EL8–48164–00	.PIN 2	2					
43	704–48221–R0	.LEVER, CONTROL	2					
44	704–48242–10	.SHAFT, DRIVE	2					
45	704–48225–R0	.COVER	2					
46	704–48192–00	.WASHER 2	2					
47	97890–06018	.SCREW, PAN HEAD	4					
48	92990–06300	.WASHER, INTERNAL TOOTH	4					
49	704–48224–R0	.COVER, CONTROL LEVER	2					
50	EL8–48279–00	.CIRCLIP 2	2					
51	704–48234–00	.BUSHING 1	2					
52	704–48219–R0	.COVER, LEAD	2					
53	704–48144–20	.PLATE, STOPPER 2	2					
54	704–48176–10	.GROMMET	1					

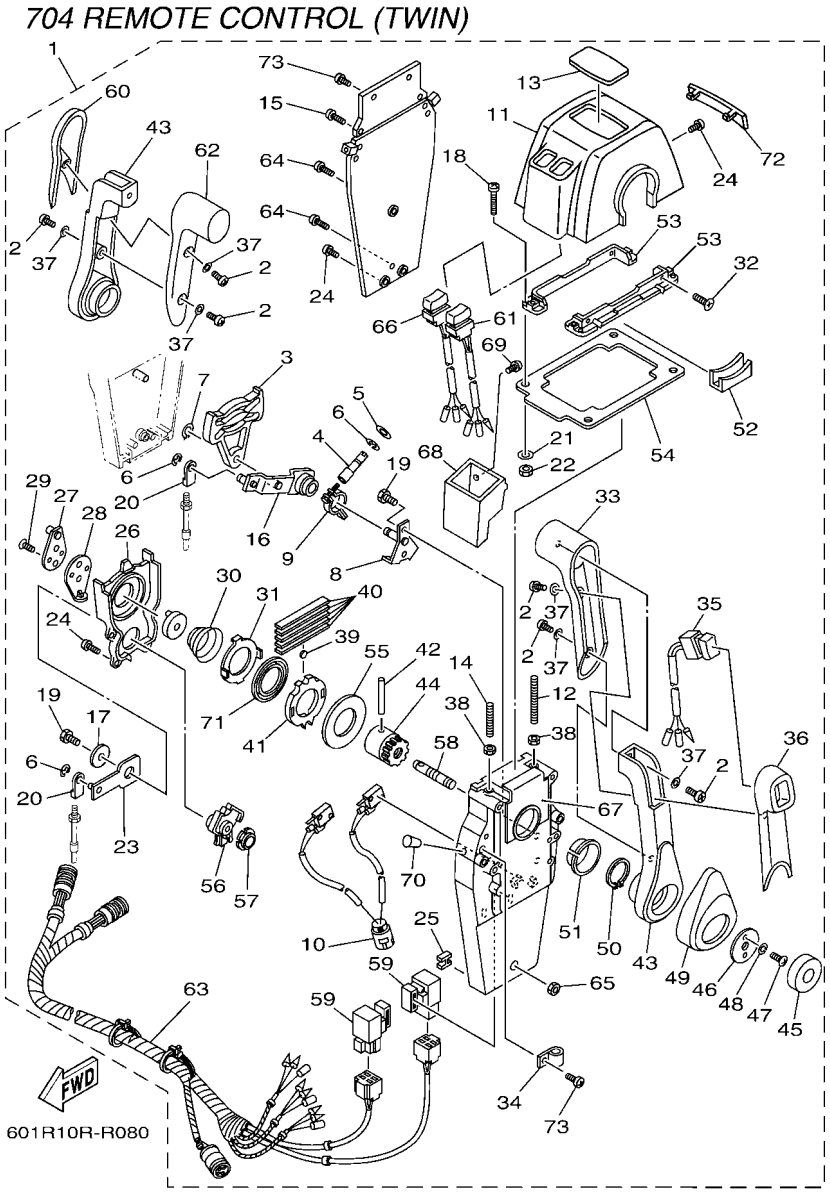

FIG. 8 REMOTE CONTROL ASSY 5

REF. NO.	PART NO.	DESCRIPTION	601R					REMARKS
55	704–48192–P0	.WASHER 2	2					
56	704–48233–00	.GEAR 2	2					
57	704–48235–00	.BUSHING	2					
58	704–48153–00	.SHAFT, FREE ACCEL.	2					
59	704–81950–11	.RELAY ASSY	2					
60	704–48229–20	.GRIP, CONTROL LEVER	1					
61	704–82563–80	.TRIM & TILT SWITCH ASSY	1					
62	704–48222–20	.GRIP, CONTROL LEVER	1					
63	704–82590–10	.WIRE HARNESS ASSY	1					
64	704–48128–00	.SCREW 2	3					
65	704–48156–00	.NUT 1	1					
66	704–82563–90	.TRIM & TILT SWITCH ASSY	1					
67	704–48284–P0	.GROMMET	2					
68	704–48285–20	.GROMMET 2	1					
69	704–48129–60	.SCREW 3	2					
70	704–48166–00	.PLUG	2					
71	704–48178–00	.PLATE, SHIFT	2					
72	704–48167–30	.PLUG	1					
73	97890–05016	.SCREW, PAN HEAD	5					

6X3 REMOTE CONTROL (RIGHT MOUNT)

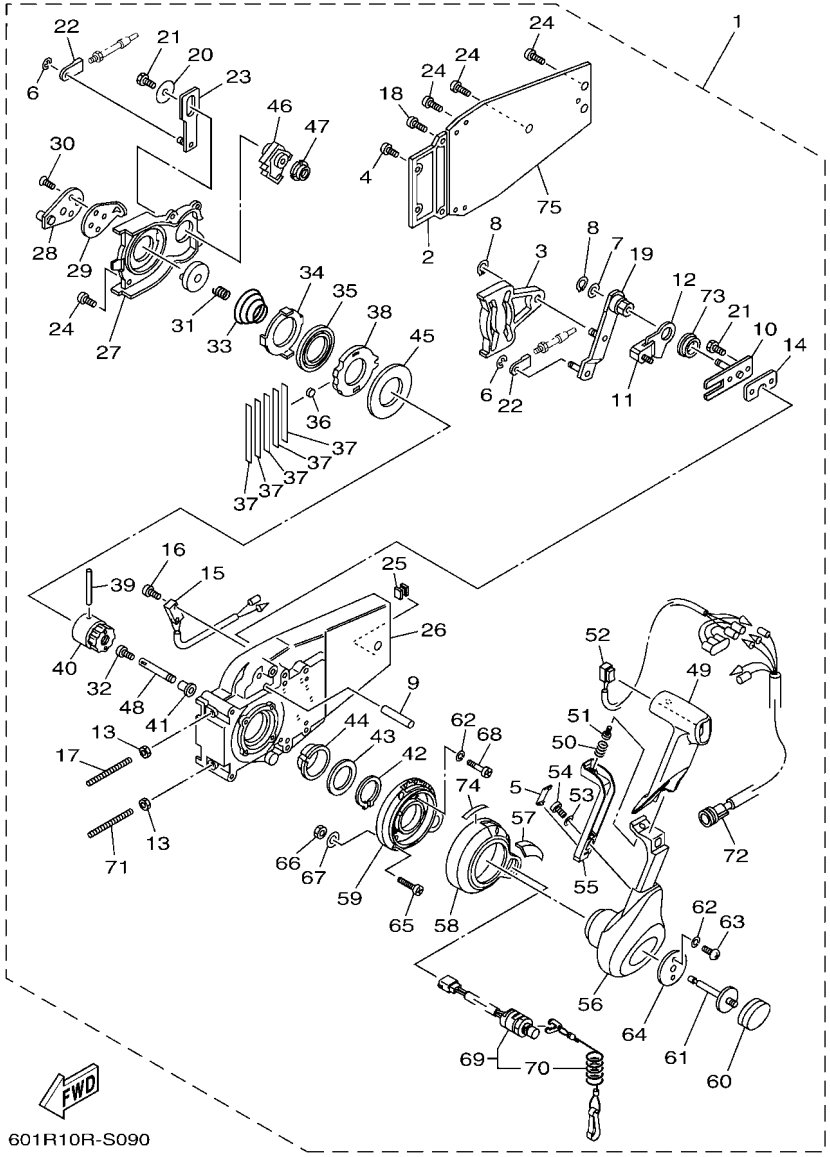

FIG. 9 REMOTE CONTROL ASSY 6

REF. NO.	PART NO.	DESCRIPTION	601R					REMARKS
1	6X3–48206–11	REMOTE CONTROL ASSY	1					FOR RIGHT MOUNT WITH PT/T SW.
2	EL8–48212–00	.BACK PLATE 1	1					
3	EL8–48251–00	.PLATE, CAM	1					
4	97890–05016	.SCREW, PAN HEAD	2					
5	6X0–48138–00	.CAP, LOCK ARM	1					
6	93430–06024	.CIRCLIP	3					
7	92990–10600	.WASHER, PLATE	1					
8	EL8–48259–00	.CIRCLIP 1	2					
9	6X0–48265–00	.SHAFT, FRICTION	1					
10	6X0–48262–00	.SHAFT, THROTTLE	1					
11	6X0–48264–00	.THROTTLE, FRICTION	1					
12	6X0–48187–00	.PLATE, ADJUST	1					
13	95380–06600	.NUT, HEXAGON	2					
14	704–48266–00	.SPACER	1					
15	704–82540–00	.NEUTRAL SWITCH ASSY	1					
16	703–48129–00	.SCREW 3	2					
17	EL8–48281–00	.SCREW	1					
18	97890–05025	.SCREW, PAN HEAD	2					
19	6X0–48261–00	.ARM, THROTTLE	1					
20	EL8–48191–00	.WASHER 1	1					
21	97380–06018	.BOLT	3					
22	703–48345–01	.CABLE END, REMOTE CONTROL 2	2					
23	EL8–48271–00	.ARM, SHIFT	1					
24	EL8–48127–00	.SCREW 1	11					
25	703–48358–01	.ANCHOR, CABLE	1					
26	6X0–48211–00	.HOUSING,1	1					
27	EL8–48231–00	.HOUSING, GEAR	1					

6X3 REMOTE CONTROL (RIGHT MOUNT)

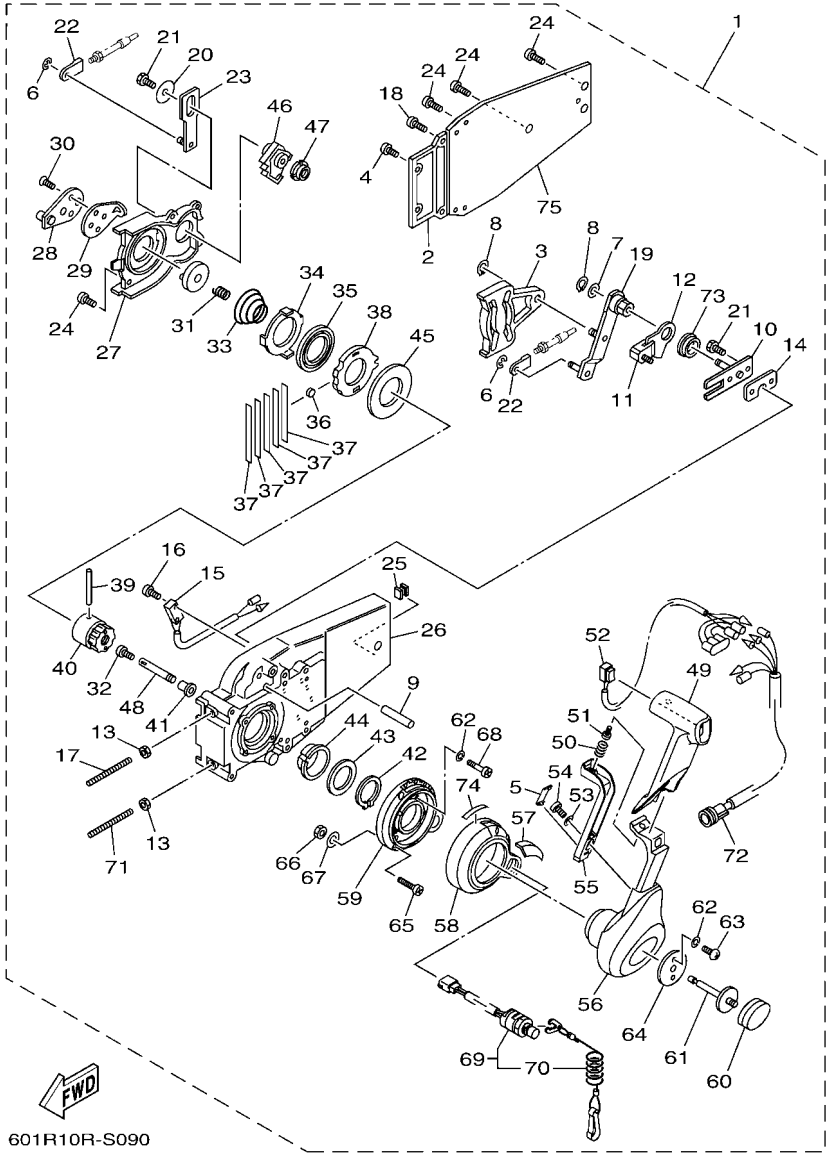

FIG. 9 REMOTE CONTROL ASSY 6

REF. NO.	PART NO.	DESCRIPTION	601R					REMARKS
28	EL8–48241–00	.ARM, DRIVE	1					
29	EL8–48254–00	.STOPPER, THROTTLE ADJUSTING	1					
30	92780–06020	.SCREW, FLAT HEAD	2					
31	EL8–48158–00	.SPRING 1	1					
32	98580–04006	.SCREW, PAN HEAD	1					
33	EL8–48244–00	.SPRING, FREE ACCEL.	1					
34	EL8–48245–00	.PLATE, LOCK	1					
35	704–48178–00	.PLATE, SHIFT	1					
36	701–48248–00	.ROLLER, FREE ACCEL.	1					
37	704–48238–00	.SPRING, DETENT	5					
38	6X0–48121–00	.GEAR 1	1					
39	EL8–48164–00	.PIN 2	1					
40	EL8–48242–10	.SHAFT, DRIVE	1					
41	702–48263–00	.BUSHING	1					
42	EL8–48279–00	.CIRCLIP 2	1					
43	704–48193–00	.WASHER 3	1					
44	EL8–48234–00	.BUSHING 1	1					
45	703–48192–00	.WASHER 2	1					
46	EL8–48233–00	.GEAR 2	1					
47	702–48235–00	.BUSHING	1					
48	6X0–48153–00	.SHAFT, FREE ACCEL.	1					
49	6X3–48222–10	.GRIP, CONTROL LEVER	1					
50	703–48227–00	.SPRING, NEUTRAL LOCK	1					
51	98580–05008	.SCREW, PAN HEAD	1					
52	6X3–82563–02	.TRIM & TILT SWITCH ASSY	1					
53	6X0–48288–00	.WASHER, PLAIN	1					
54	6X0–48127–00	.SCREW 1	1					

6X3 REMOTE CONTROL (RIGHT MOUNT)

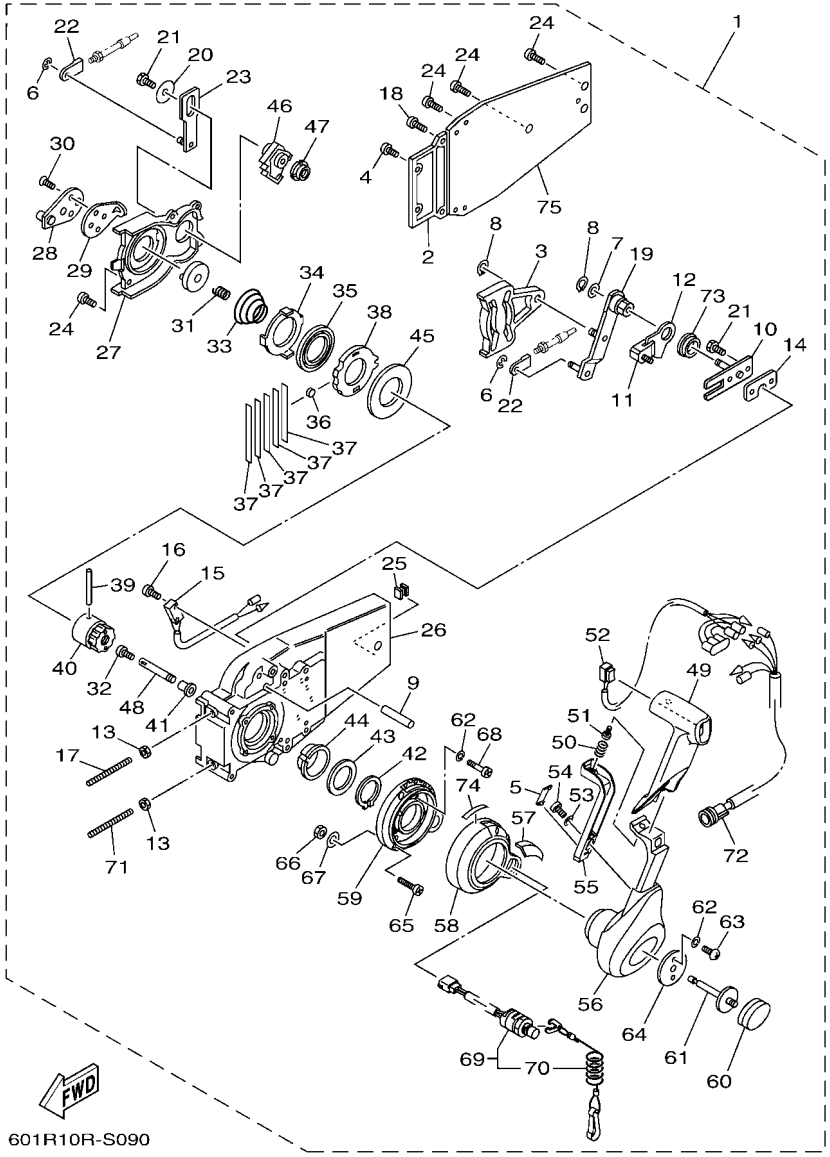

FIG. 9 REMOTE CONTROL ASSY 6

REF. NO.	PART NO.	DESCRIPTION	601R					REMARKS
55	6X0–48223–00	.LOCK, NEUTRAL	1					
56	6X3–48221–10	.LEVER, CONTROL	1					
57	6X3–48225–10	.COVER	1					
58	6X3–48225–00	.COVER	1					
59	6X3–48111–00	.BODY, REMOTE CONTROL 1	1					
60	6X3–48225–30	.COVER	1					
61	6X0–48155–00	.PLUNGER	1					
62	92990–05300	.WASHER, INTERNAL TOOTH	6					
63	6X0–48281–00	.SCREW	2					
64	6X0–48193–00	.WASHER 3	1					
65	97890–06035	.SCREW, PAN HEAD	3					UR
	6X0–48128–00	.SCREW(M6X30)	3					UR
66	6X0–48156–00	.NUT 1	3					
67	701–48287–00	.WASHER	3					
68	6X3–48129–00	.SCREW 3	4					
69	6X3–82575–01	.ENGINE STOP SWITCH ASSY	1					
70	682–82556–00	..LANYARD, STOP SWITCH	1					
71	704–48281–00	.SCREW	1					
72	704–82541–10	.WIRE, LEAD	1					
73	6X0–48116–00	.BUSHING	1					
74	6X3–44191–00	.INDICATOR, SHIFT	1					
75	EL8–48213–00	.BACK PLATE 2	1					

6X3 REMOTE CONTROL (LEFT MOUNT)

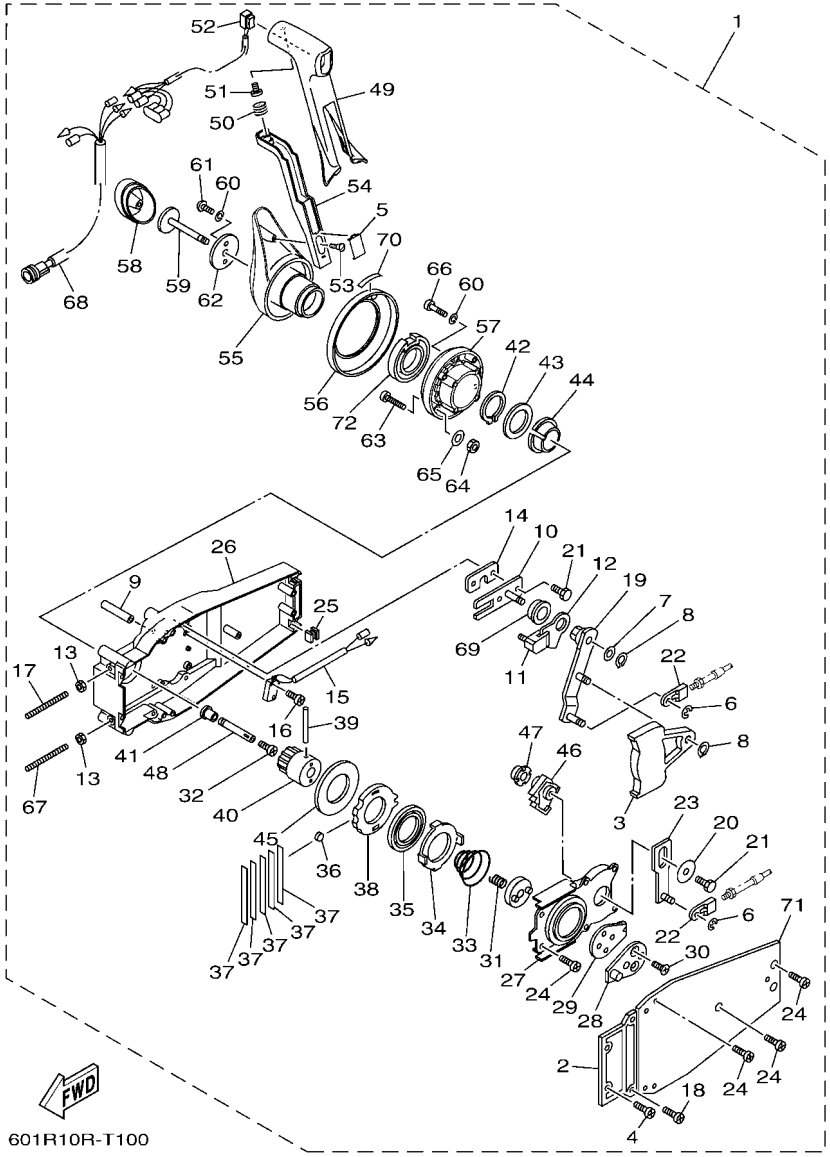

FIG. 10 REMOTE CONTROL ASSY 7

REF. NO.	PART NO.	DESCRIPTION	601R					REMARKS
1	6X3–48206–22	REMOTE CONTROL ASSY	1					FOR LEFT MOUNT WITH PT/T SW.
2	EL8–48212–00	.BACK PLATE 1	1					
3	EL8–48251–00	.PLATE, CAM	1					
4	97890–05016	.SCREW, PAN HEAD	2					
5	6X0–48138–00	.CAP, LOCK ARM	1					
6	93430–06024	.CIRCLIP	3					
7	92990–10600	.WASHER, PLATE	1					
8	EL8–48259–00	.CIRCLIP 1	2					
9	6X0–48265–00	.SHAFT, FRICTION	1					
10	6X0–48262–00	.SHAFT, THROTTLE	1					
11	6X0–48264–00	.THROTTLE, FRICTION	1					
12	6X0–48187–00	.PLATE, ADJUST	1					
13	95380–06600	.NUT, HEXAGON	2					
14	704–48266–00	.SPACER	1					
15	704–82540–00	.NEUTRAL SWITCH ASSY	1					
16	703–48129–00	.SCREW 3	2					
17	EL8–48281–00	.SCREW	1					
18	97890–05025	.SCREW, PAN HEAD	2					
19	6X0–48261–00	.ARM, THROTTLE	1					
20	EL8–48191–00	.WASHER 1	1					
21	97380–06018	.BOLT	3					
22	703–48345–01	.CABLE END, REMOTE CONTROL 2	2					
23	EL8–48271–00	.ARM, SHIFT	1					
24	EL8–48127–00	.SCREW 1	11					
25	703–48358–01	.ANCHOR, CABLE	1					
26	6X0–48211–00	.HOUSING,1	1					
27	EL8–48231–00	.HOUSING, GEAR	1					

6X3 REMOTE CONTROL (LEFT MOUNT)

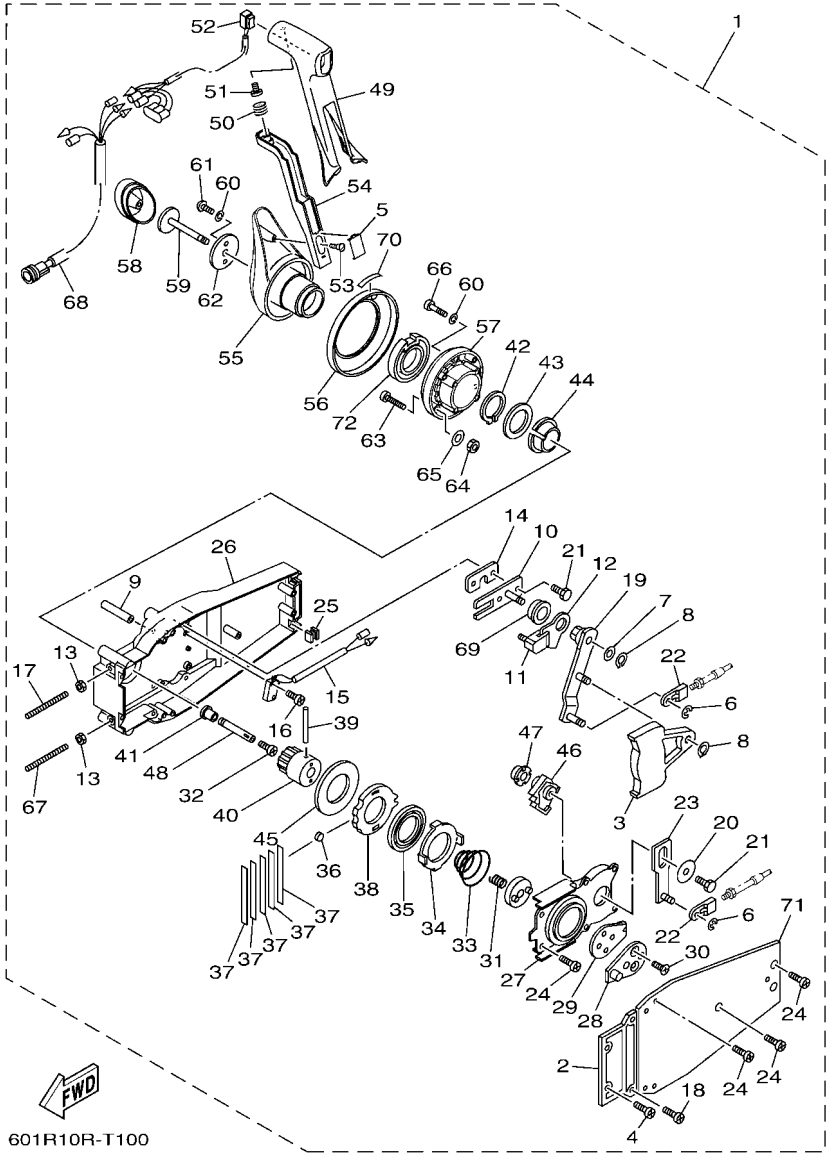

FIG. 10 REMOTE CONTROL ASSY 7

REF. NO.	PART NO.	DESCRIPTION	601R					REMARKS
28	EL8–48241–00	.ARM, DRIVE	1					
29	EL8–48254–00	.STOPPER, THROTTLE ADJUSTING	1					
30	92780–06020	.SCREW, FLAT HEAD	2					
31	EL8–48158–00	.SPRING 1	1					
32	98580–04006	.SCREW, PAN HEAD	1					
33	EL8–48244–00	.SPRING, FREE ACCEL.	1					
34	EL8–48245–00	.PLATE, LOCK	1					
35	704–48178–00	.PLATE, SHIFT	1					
36	701–48248–00	.ROLLER, FREE ACCEL.	1					
37	704–48238–00	.SPRING, DETENT	5					
38	6X0–48121–00	.GEAR 1	1					
39	EL8–48164–00	.PIN 2	1					
40	EL8–48242–10	.SHAFT, DRIVE	1					
41	702–48263–00	.BUSHING	1					
42	EL8–48279–00	.CIRCLIP 2	1					
43	704–48193–00	.WASHER 3	1					
44	EL8–48234–00	.BUSHING 1	1					
45	703–48192–00	.WASHER 2	1					
46	EL8–48233–00	.GEAR 2	1					
47	702–48235–00	.BUSHING	1					
48	6X0–48153–00	.SHAFT, FREE ACCEL.	1					
49	6X3–48222–20	.GRIP, CONTROL LEVER	1					
50	703–48227–00	.SPRING, NEUTRAL LOCK	1					
51	98580–05008	.SCREW, PAN HEAD	1					
52	6X3–82563–02	.TRIM & TILT SWITCH ASSY	1					
53	6X3–48254–00	.STOPPER, THROTTLE ADJUST	1					
54	6X3–48223–10	.LOCK, NEUTRAL	1					

6X3 REMOTE CONTROL (LEFT MOUNT)

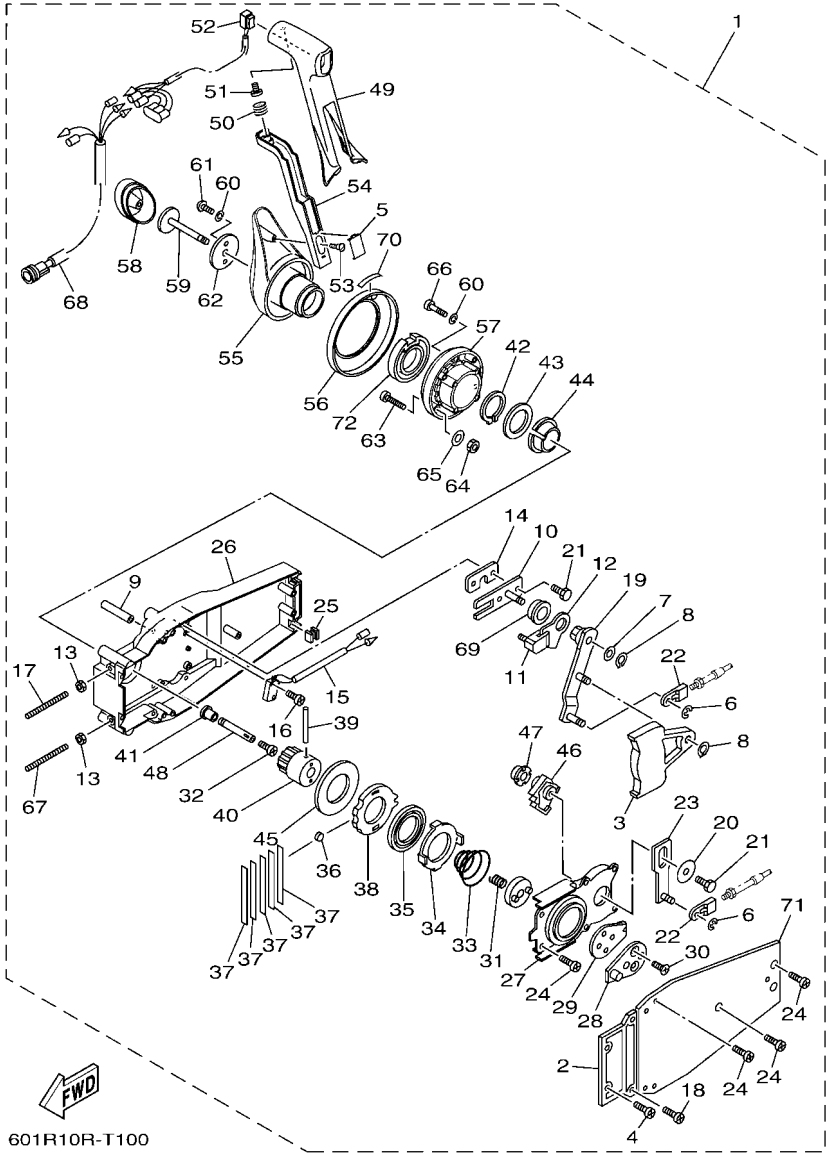

FIG. 10 REMOTE CONTROL ASSY 7

REF. NO.	PART NO.	DESCRIPTION	601R					REMARKS
55	6X3–48221–20	.LEVER, CONTROL	1					
56	6X0–48225–00	.COVER	1					
57	6X0–48111–00	.BODY, REMOTE CONTROL 1	1					
58	6X3–48225–30	.COVER	1					
59	6X0–48155–00	.PLUNGER	1					
60	92990–05300	.WASHER, INTERNAL TOOTH	6					
61	6X0–48281–00	.SCREW	2					
62	6X0–48193–00	.WASHER 3	1					
63	97890–06035	.SCREW, PAN HEAD	3					UR
	6X0–48128–00	.SCREW(M6X30)	3					UR
64	6X0–48156–00	.NUT 1	3					
65	701–48287–00	.WASHER	3					
66	6X0–48129–00	.SCREW 3	4					
67	704–48281–00	.SCREW	1					
68	704–82541–10	.WIRE, LEAD	1					
69	6X0–48116–00	.BUSHING	1					
70	6X3–44191–00	.INDICATOR, SHIFT	1					
71	EL8–48213–00	.BACK PLATE 2	1					
72	6X3–48245–00	.PLATE, LOCK	1					

6X5 REMOTE CONTROL (TRIPLE)

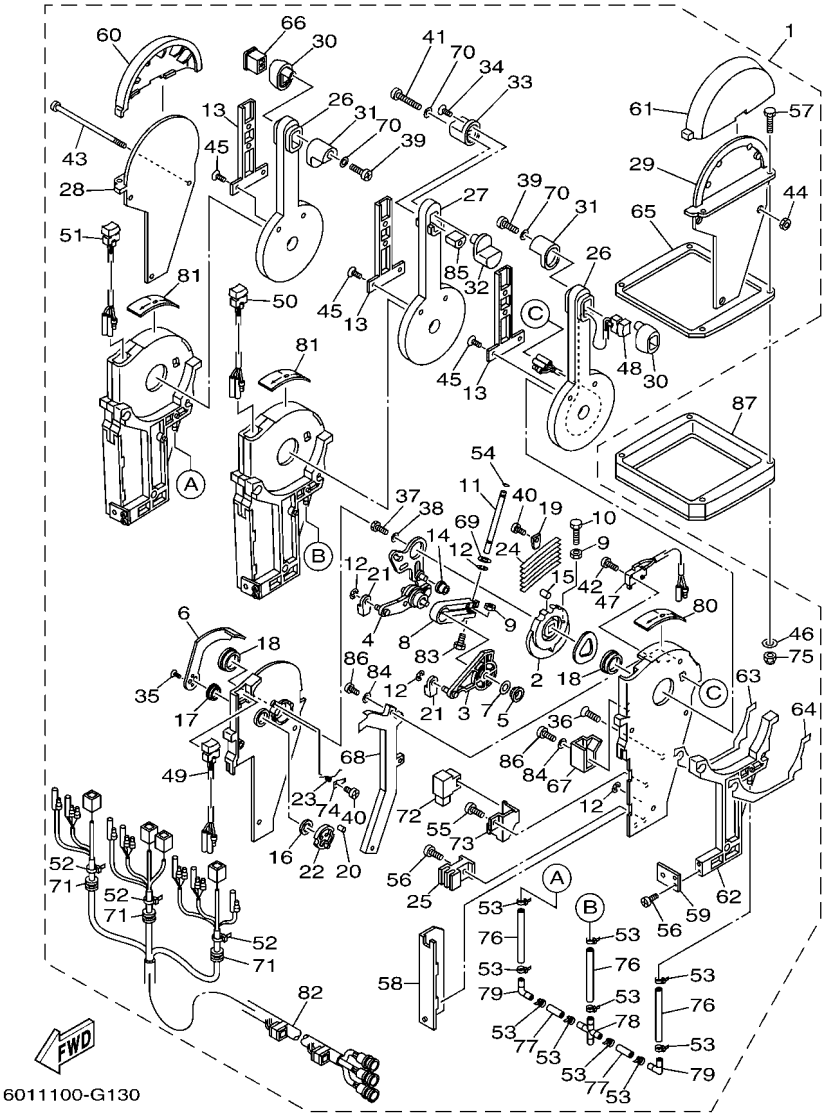

FIG. 11 REMOTE CONTROL ASSY 8

REF. NO.	PART NO.	DESCRIPTION	601R					REMARKS
1	6X5–48207–03	REMOTE CONTROL ASSY	1					WITH PT/T SW.
2	6X5–48232–00	.GEAR	3					
3	6X5–48271–00	.ARM, SHIFT	3					
4	6X5–48261–00	.ARM, THROTTLE	3					
5	703–48235–00	.BUSHING	3					
6	6X5–48152–00	.KNOB, FREE ACCEL.	3					
7	703–48268–00	.SPACER	3					
8	6X5–48264–00	.FRICTION, THROTTLE	3					
9	95380–05600	.NUT	6					
10	97380–05025	.BOLT	3					
11	6X5–48265–00	.SHAFT, FRICTION	3					
12	93430–06024	.CIRCLIP	12					
13	6X5–48224–00	.COVER, CONTROL LEVER	3					
14	703–48252–00	.ROLLER, CAM	3					
15	701–48248–00	.ROLLER, FREE ACCEL.	3					
16	703–48198–00	.WASHER, WAVE	3					
17	703–48243–00	.BUSHING	3					
18	703–48236–00	.BUSHING 1	6					
19	703–48189–00	.RETAINER	3					
20	703–48234–00	.ROLLER, DETENT	3					
21	703–48345–01	.CABLE END, REMOTE CONTROL 2	6					
22	703–48153–00	.SHAFT, FREE ACCEL.	3					
23	703–48244–00	.SPRING, FREE ACCEL.	3					
24	703–48238–00	.SPRING, DETENT	18					
25	6X5–48358–00	.ANCHOR, CABLE	3					
26	6X5–48221–00	.LEVER, CONTROL	2					
27	6X5–48221–10	.LEVER, CONTROL	1					

6X5 REMOTE CONTROL (TRIPLE)

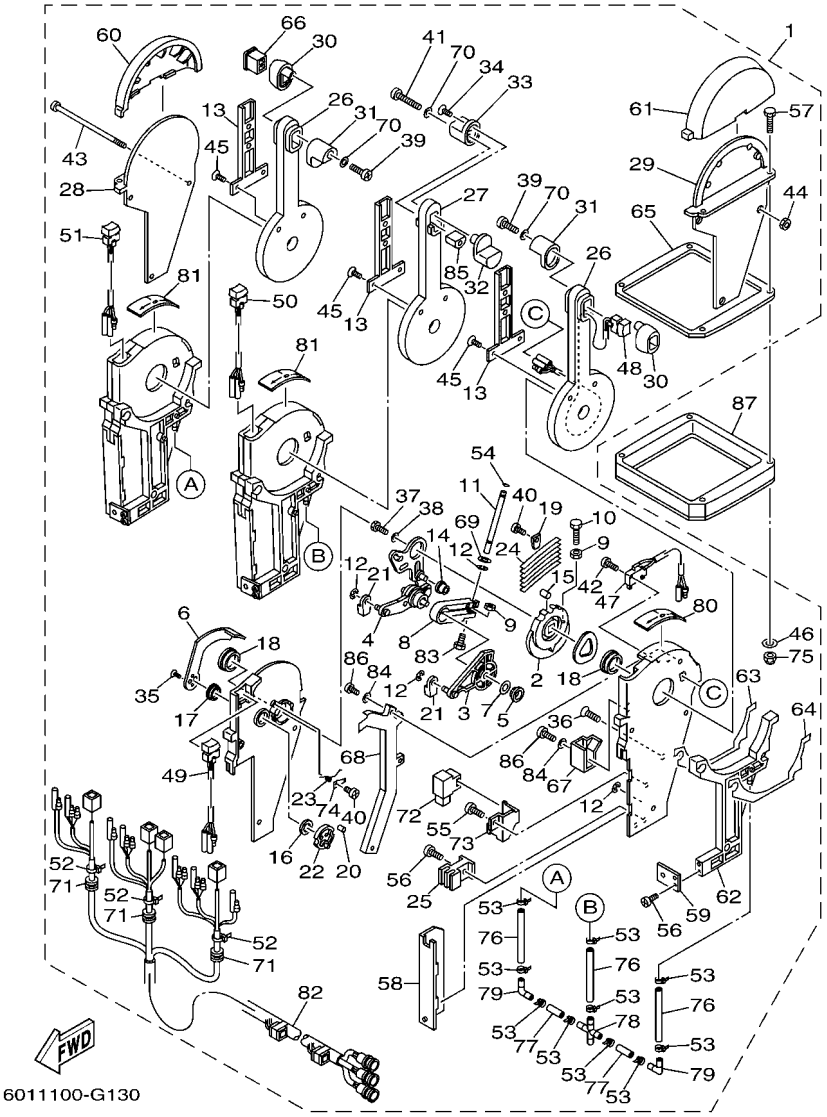

FIG. 11 REMOTE CONTROL ASSY 8

REF. NO.	PART NO.	DESCRIPTION	601R					REMARKS
28	6X5–48144–10	.PLATE, STOPPER 2	1					
29	6X5–48144–00	.PLATE, STOPPER 2	1					
30	6X5–48229–01	.GRIP, CONTROL LEVER	2					
31	6X5–48222–01	.GRIP, CONTROL LEVER	2					
32	6X5–48229–11	.GRIP, CONTROL LEVER	1					
33	6X5–48222–11	.GRIP, CONTROL LEVER	1					
34	6X5–48127–00	.SCREW 1	1					
35	703–48128–00	.SCREW 2	6					
36	6X5–48129–00	.SCREW 3	9					
37	97380–08030	.BOLT	3					
38	92990–08200	.WASHER, PLAIN	3					
39	6X5–48127–10	.SCREW 1	2					
40	98580–04006	.SCREW, PAN HEAD	6					
41	6X5–48127–20	.SCREW 1	1					
42	703–48129–00	.SCREW 3	6					
43	6X5–48267–00	.BOLT SET	3					
44	6X0–48156–00	.NUT 1	3					
45	98780–04010	.SCREW, FLAT HEAD	6					
46	704–48287–00	.WASHER	4					
47	6X5–82540–00	.NEUTRAL SWITCH ASSY	3					
48	6X5–82563–02	.TRIM & TILT SWITCH ASSY	1					
49	6X5–82563–12	.TRIM & TILT SWITCH ASSY	1					
50	6X5–82563–22	.TRIM & TILT SWITCH ASSY	1					
51	6X5–82563–32	.TRIM & TILT SWITCH ASSY	1					
52	703–82591–00	.BAND	3					
53	6X4–42821–00	.BAND, CLAMP	14					
54	6X5–48351–00	.SEAL, RUBBER	3					

6X5 REMOTE CONTROL (TRIPLE)

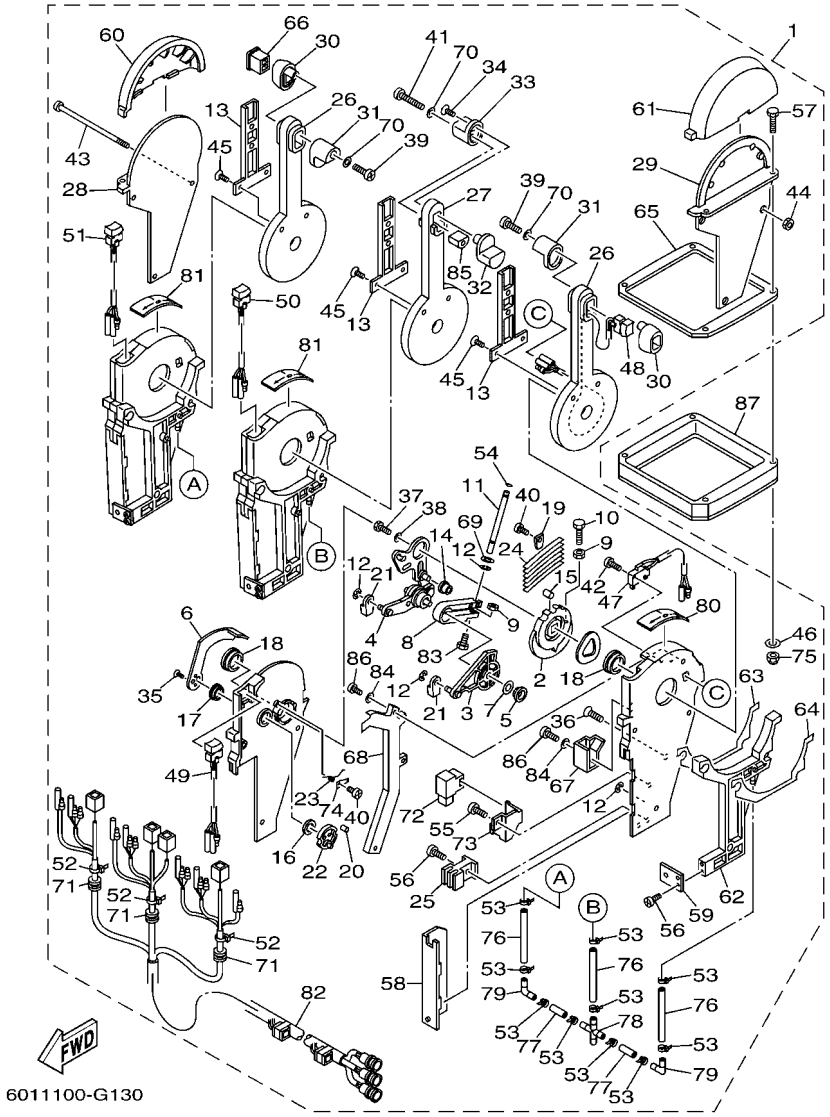

FIG. 11 REMOTE CONTROL ASSY 8

REF. NO.	PART NO.	DESCRIPTION	601R					REMARKS
55	98580–05010	.SCREW, PAN HEAD	3					
56	98580–05012	.SCREW, PAN HEAD	12					
57	98580–05040	.SCREW, PAN HEAD	4					UR
	97780–05130	.SCREW, TAPPING	4					UR
58	6X5–48213–00	.BACK PLATE 2	3					
59	6X5–48354–00	.SET-PLATE, CABLE	3					
60	6X5–48119–11	.COVER	1					
61	6X5–48119–01	.COVER	1					
62	6X5–48246–00	.SPACER	3					
63	6X5–48214–00	.PAD	3					
64	6X5–48214–10	.PAD	3					
65	6X5–48176–00	.GROMMET	1					
66	6X5–48222–21	.GRIP, CONTROL LEVER	1					
67	6X5–48219–00	.COVER, LEAD	3					
68	6X5–48225–00	.COVER	3					
69	92990–08600	.WASHER, PLATE	3					
70	92990–05300	.WASHER, INTERNAL TOOTH	3					
71	6X5–48175–00	.BOOT	3					
72	704–81950–11	.RELAY ASSY	4					
73	6X5–48228–00	.HOLDER, SWITCH	3					
74	703–48246–00	.SPACER	3					
75	95380–06600	.NUT, HEXAGON	4					
76	6X5–48317–00	.TUBE	3					
77	6X5–48317–10	.TUBE	2					
78	6X5–48338–00	.CONNECTOR	1					
79	6X5–48338–10	.CONNECTOR	2					
80	6X5–48215–00	.GRAPHIC	1					

6X5 REMOTE CONTROL (TRIPLE)

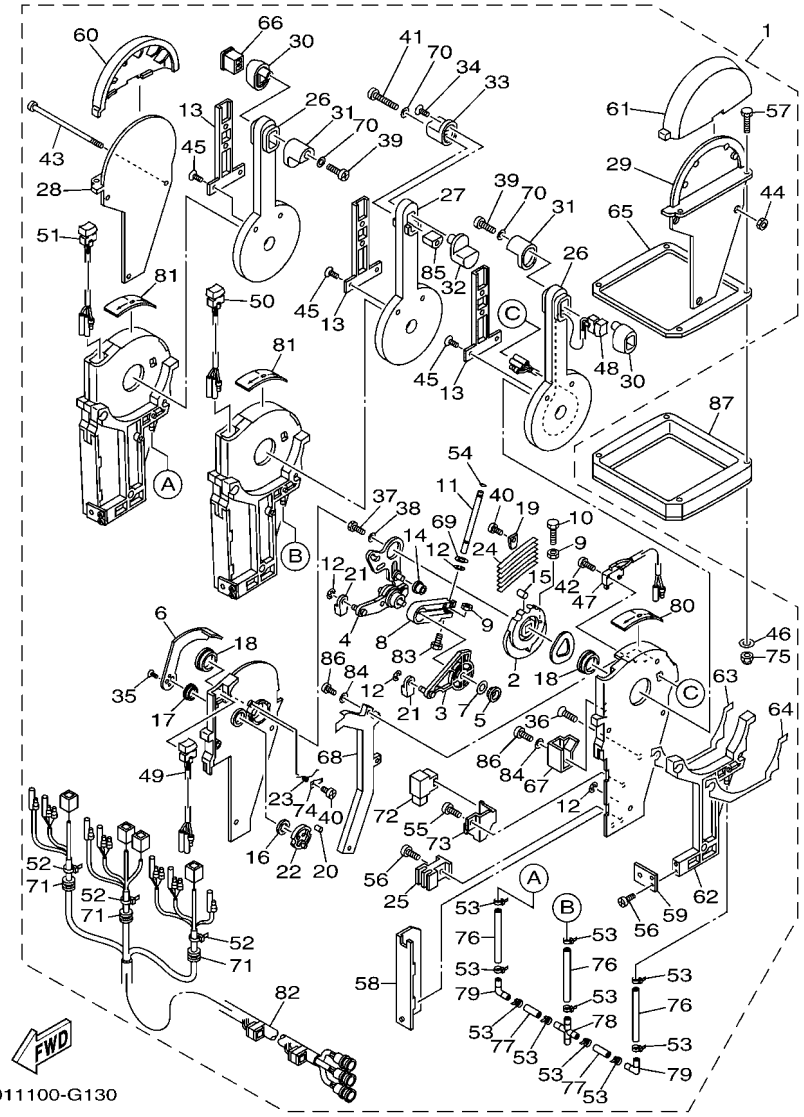

FIG. 11 REMOTE CONTROL ASSY 8

REF. NO.	PART NO.	DESCRIPTION	601R					REMARKS
81	6X5–48215–10	.GRAPHIC	2					
82	6X5–82590–00	.WIRE HARNESS ASSY	1					
83	6X5–48267–00	.BOLT SET	3					
84	92990–05200	.WASHER, PLAIN	15					
85	6X5–48222–30	.GRIP, CONTROL LEVER	1					
86	98580–05012	.SCREW, PAN HEAD	15					
87	*	SPACER, REMOTE CONTROL	1					LM

FIG. 12 REMOTE CONTROL CABLES

REMOTE CONTROL CABLE

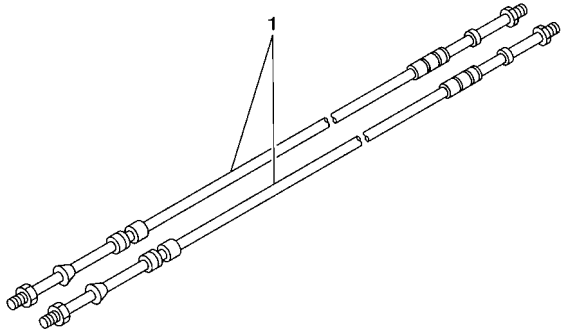

6011100-G140

REF. NO.	PART NO.	DESCRIPTION	601R					REMARKS
1	701–48310–10	CABLE, REMOTE CONTROL L=6F	2					UR
	701–48310–20	CABLE, REMOTE CONTROL L=7F	2					UR
	701–48310–40	CABLE, REMOTE CONTROL L=8F	2					UR
	701–48310–60	CABLE, REMOTE CONTROL L=9F	2					UR
	701–48310–80	CABLE, REMOTE CONTROL L=10F	2					UR
	701–48310–90	CABLE, REMOTE CONTROL L=11F	2					UR
	701–48320–00	CABLE, REMOTE CONTROL L=12F	2					UR
	701–48320–20	CABLE, REMOTE CONTROL L=13F	2					UR
	701–48320–30	CABLE, REMOTE CONTROL L=14F	2					UR
	701–48320–50	CABLE, REMOTE CONTROL L=15F	2					UR
	701–48320–60	CABLE, REMOTE CONTROL L=16F	2					UR
	701–48320–80	CABLE, REMOTE CONTROL L=17F	2					UR
	701–48320–90	CABLE, REMOTE CONTROL L=18F	2					UR
	701–48320–40	CABLE, REMOTE CONTROL L=19F	2					UR
	701–48320–70	CABLE, REMOTE CONTROL L=20F	2					UR
	701–48350–00	CABLE, REMOTE CONTROL L=21F	2					UR
	701–48350–10	CABLE, REMOTE CONTROL L=22F	2					UR
	701–48350–20	CABLE, REMOTE CONTROL L=23F	2					UR
	701–48350–30	CABLE, REMOTE CONTROL L=24F	2					UR
	701–48350–40	CABLE, REMOTE CONTROL L=25F	2					UR
	701–48350–50	CABLE, REMOTE CONTROL L=26F	2					UR
	701–48350–60	CABLE, REMOTE CONTROL L=27F	2					UR
	701–48350–70	CABLE, REMOTE CONTROL L=31F	2					UR

REMOTE CONTROL SPECIFICATION LIST (6X9 TYPE)

TYPE : 6X9	MECHANICAL SPECIFICATION							
TYPE : 6X9	LIST UP SEC.	ENGINE				SINGLE STATION	DUAL STATION	
PART NO.	FIG.NO.-REF.NO.	SINGLE	TWIN	TRIPLE	QUAD		MAIN	2ND
6X9–48A01–01	13-1,16-1	○	*	*	*	○	○	
6X9–48A02–01	14-1,17-1	*	○	*	*	○	○	
	14-1,18-1	*	*	○	*	○	○	
	14-1,19-1	*	*		○	○	○	
6X9–48A00–00	15-1,20-1	○	*	*	*	○	○	
6X9–48A01–01	13-1,21-1	○	*	*	*			○
6X9–48A02–01	14-1,22-1	*	○	○	○			○
6X9–48A00–00	15-1,23-1	○	*	*	*			○

SINGLE ENGINE

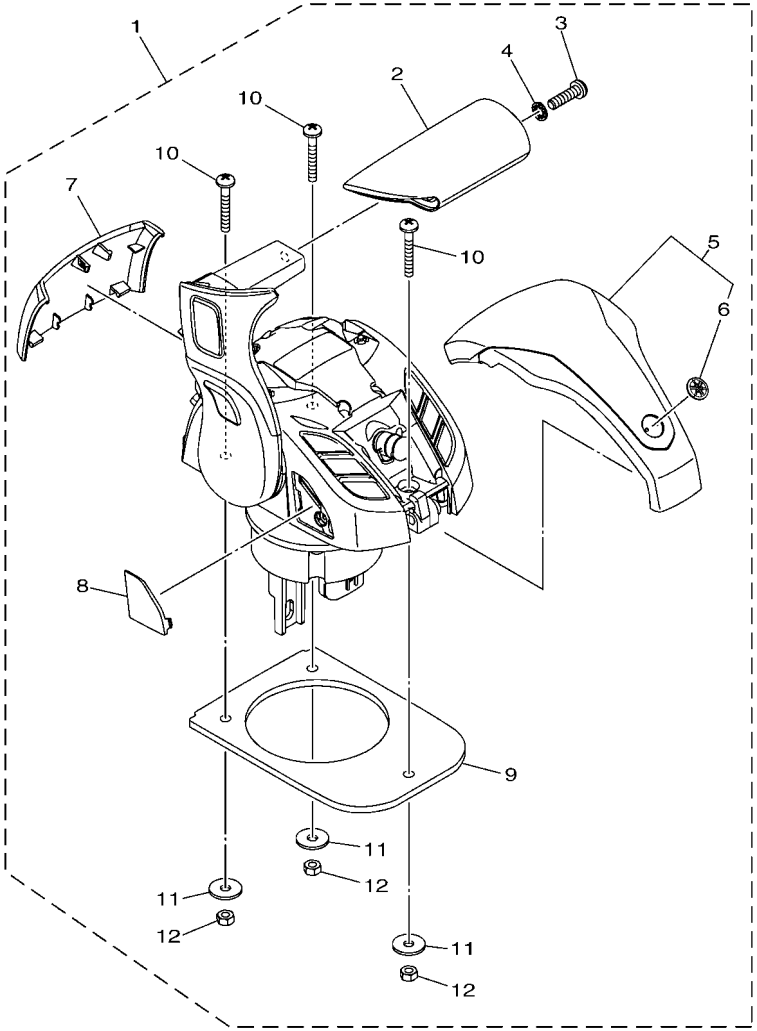

6X91100-U010

FIG. 13 DEC 1 (SINGLE)

REF. NO.	PART NO.	DESCRIPTION	601R					REMARKS
1	6X9–48A01–01	REMOTE CONTROL BOX ASSY 2	1					NOT FOR SALE
2	6X9–4822A–00	.GRIP, LEVER SINGL	1					
3	6X9–48127–00	.SCREW 1	1					
4	92990–05300	.WASHER, INTERNAL TOOTH	1					
5	6X9–48400–00	.COVER ASSY	1					
6	6X9–42697–00	..TUNING FORK MARK	1					
7	6X9–4811C–00	.COVER, SINGLE	1					
8	6X9–48167–00	.PLUG	1					
9	6X9–48176–00	.GROMMET	1					
10	97780–50145	.SCREW, TAPPING	3					UR
	98580–05060	.SCREW, PAN HEAD	3					UR
11	704–48287–00	.WASHER	3					
12	95380–05600	.NUT	3					

TWIN, TRIPLE, QUAD ENGINE

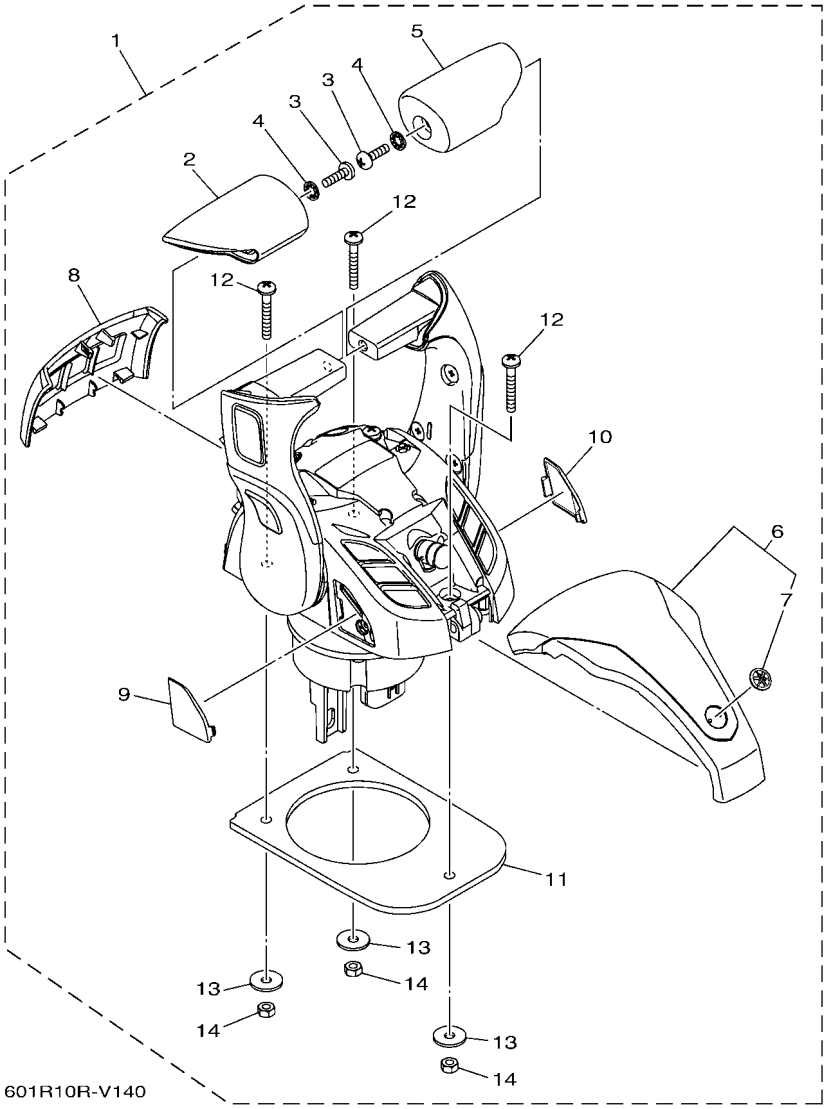

FIG. 14 DEC 2 (MULTIPLE)

REF. NO.	PART NO.	DESCRIPTION	601R					REMARKS
1	6X9–48A02–01	REMOTE CONTROL BOX ASSY 3	1					NOT FOR SALE
2	6X9–4822B–00	.GRIP, LEVER MULTI	1					
3	6X9–48127–00	.SCREW 1	2					
4	92990–05300	.WASHER, INTERNAL TOOTH	2					
5	6X9–48222–00	.GRIP, CONTROL LEVER	1					
6	6X9–48400–00	.COVER ASSY	1					
7	6X9–42697–00	..TUNING FORK MARK	1					
8	6X9–48119–00	.COVER	1					
9	6X9–48167–00	.PLUG	1					
10	6X9–48168–00	.PLUG 2	1					
11	6X9–48176–00	.GROMMET	1					
12	97780–50145	.SCREW, TAPPING	3					UR
	98580–05060	.SCREW, PAN HEAD	3					UR
13	704–48287–00	.WASHER	3					
14	95380–05600	.NUT	3					

FIG. 15 DEC 3 (FLUSH SIDE MOUNT)

SINGLE ENGINE (FLUSH SIDE MOUNT)

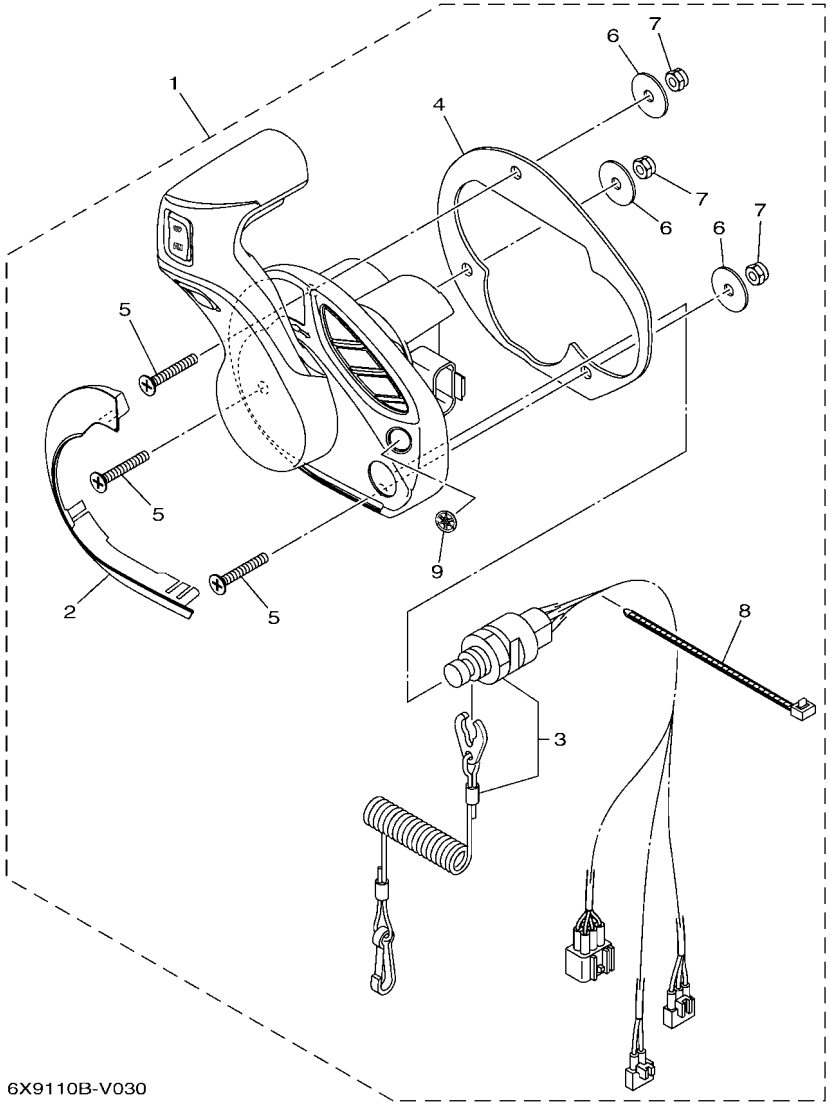

REF. NO.	PART NO.	DESCRIPTION	601R					REMARKS
1	6X9–48A00–00	REMOTE CONTROL BOX ASSY 1	1					NOT FOR SALE
2	6X9–48166–00	.PLUG	1					
3	6X7–82575–01	.ENGINE STOP SWITCH ASSY	1					
4	6X9–4823B–00	.PACKING 2	1					
5	98780–06035	.SCREW, FLAT HEAD	3					UR
	97780–06230	.SCREW, TAPPING	3					UR
6	701–48287–00	.WASHER	3					
7	6X0–48156–00	.NUT 1	3					
8	6X9–42821–00	.BAND, CLAMP	1					
9	6X9–42697–00	.TUNING FORK MARK	1					

DIGITAL ELECTRONIC CONTROL (SINGLE ENGINE / MAIN STATION)

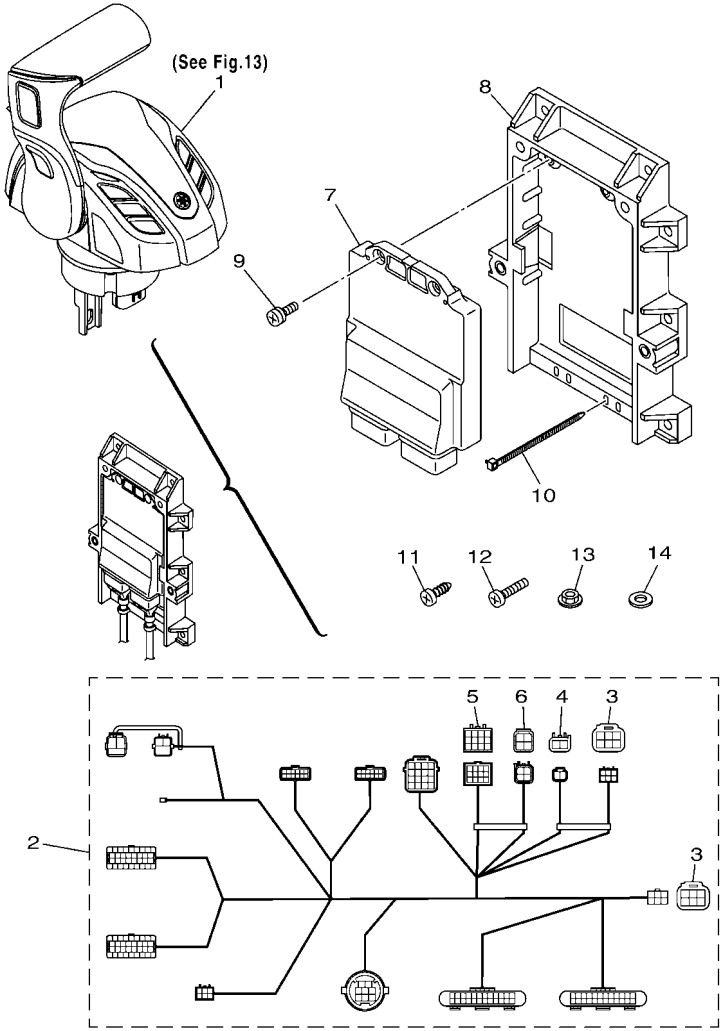

601R10R-V160

FIG. 16 DEC 4 (SINGLE/MAIN ST)

REF. NO.	PART NO.	DESCRIPTION	601R					REMARKS
1	6X9–48A01–01	REMOTE CONTROL BOX ASSY 2	1					NOT FOR SALE
2	6X9–82580–02	WIRE HARNESS ASSY 2	1					
3	6Y8–85371–01	.END OF LINE RESISTOR	2					
4	68V–82582–10	.CAP 1 (2P)	1					
5	6X9–82582–00	.CAP 1 (12P)	1					
6	6Y8–82582–11	.CAP 1 (4PIN)	1					
7	6X6–85590–41	CONTROL UNIT ASSY	1					
8	6X9–48211–00	HOUSING,1	1					
9	97607–05212	SCREW, WITH WASHER	2					
10	90465–13M11	CLAMP	2					
11	90167–06M00	SCREW, TAPPING	8					
12	97880–06035	SCREW, PAN HEAD	8					
13	95780–06300	NUT, FLANGE	8					
14	90201–06M30	WASHER, PLATE	8					

FIG. 17 DEC 5 (TWIN/MAIN ST)

DIGITAL ELECTRONIC CONTROL
(TWIN ENGINE / MAIN STATION)

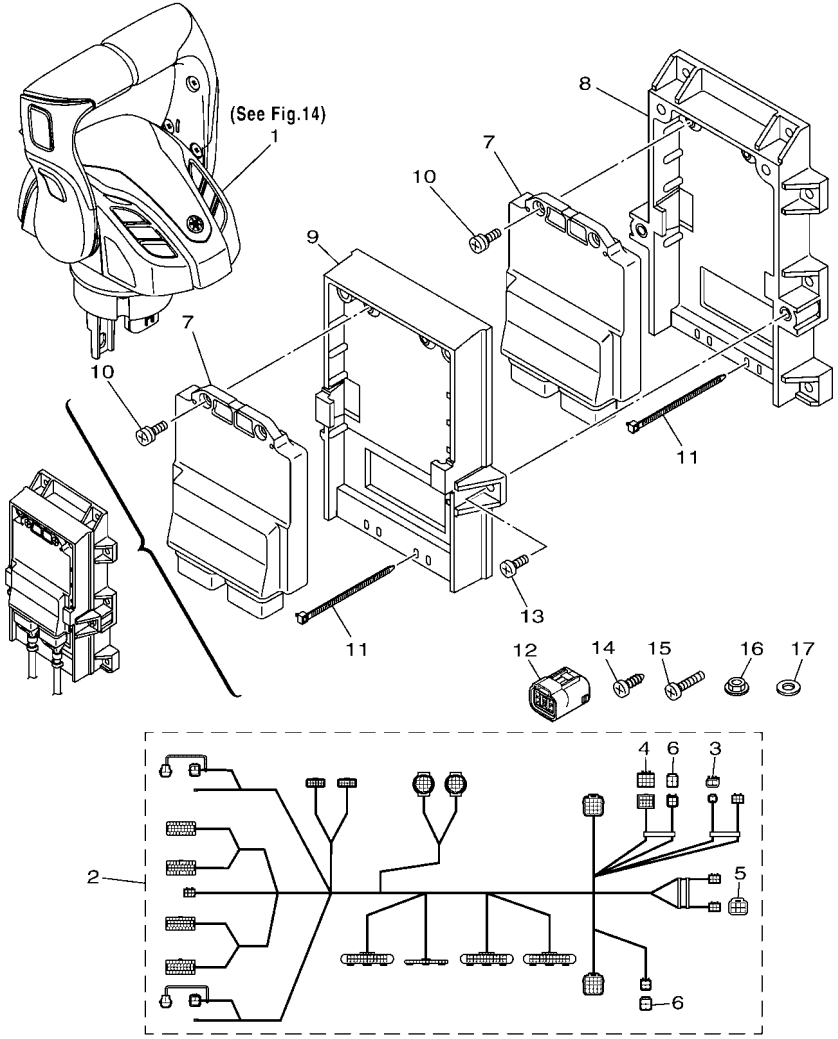

REF. NO.	PART NO.	DESCRIPTION	601R					REMARKS
1	6X9–48A02–01	REMOTE CONTROL BOX ASSY 3	1					NOT FOR SALE
2	6X9–82580–42	WIRE HARNESS ASSY 2	1					
3	68V–82582–10	.CAP 1 (2P)	1					
4	6X9–82582–00	.CAP 1 (12P)	1					
5	6X9–82582–10	.CAP 1 (6P)	1					
6	6Y8–82582–11	.CAP 1 (4PIN)	2					
7	6X6–85590–41	CONTROL UNIT ASSY	2					
8	6X9–48211–00	HOUSING,1	1					
9	6X9–4821A–00	HOUSING, 2	1					
10	97607–05212	SCREW, WITH WASHER	4					
11	90465–13M11	CLAMP	4					
12	6Y8–85371–01	END OF LINE RESISTOR	2					
13	98507–06016	SCREW, PAN HEAD	4					
14	90167–06M00	SCREW, TAPPING	8					
15	97880–06035	SCREW, PAN HEAD	8					
16	95780–06300	NUT, FLANGE	8					
17	90201–06M30	WASHER, PLATE	8					

FIG. 18 DEC 6 (TRIPLE/MAIN ST)

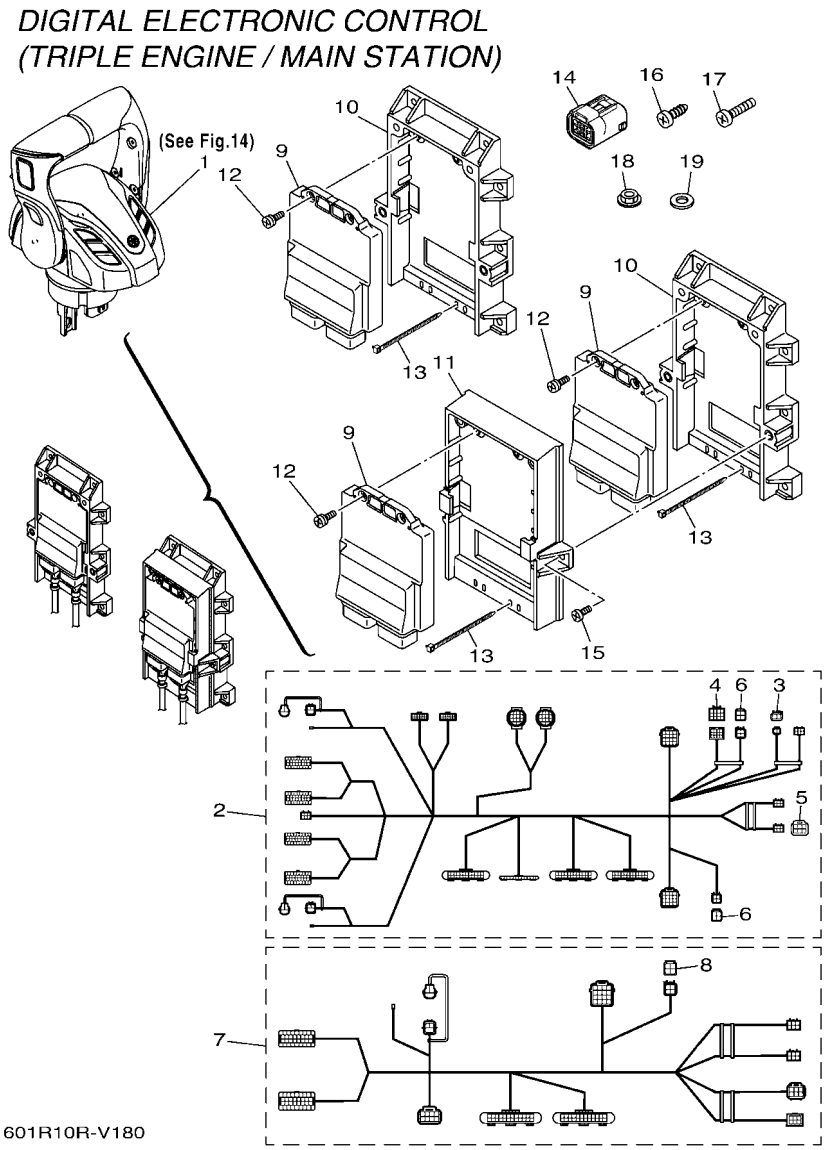

REF. NO.	PART NO.	DESCRIPTION	601R					REMARKS
1	6X9–48A02–01	REMOTE CONTROL BOX ASSY 3	1					NOT FOR SALE
2	6X9–82580–42	WIRE HARNESS ASSY 2	1					
3	68V–82582–10	.CAP 1 (2P)	1					
4	6X9–82582–00	.CAP 1 (12P)	1					
5	6X9–82582–10	.CAP 1 (6P)	1					
6	6Y8–82582–11	.CAP 1 (4PIN)	2					
7	6X9–82580–C2	WIRE HARNESS ASSY 2	1					
8	6Y8–82582–11	.CAP 1 (4PIN)	1					
9	6X6–85590–41	CONTROL UNIT ASSY	3					
10	6X9–48211–00	HOUSING,1	2					
11	6X9–4821A–00	HOUSING, 2	1					
12	97607–05212	SCREW, WITH WASHER	6					
13	90465–13M11	CLAMP	6					
14	6Y8–85371–01	END OF LINE RESISTOR	2					
15	98507–06016	SCREW, PAN HEAD	4					
16	90167–06M00	SCREW, TAPPING	16					
17	97880–06035	SCREW, PAN HEAD	16					
18	95780–06300	NUT, FLANGE	16					
19	90201–06M30	WASHER, PLATE	16					

FIG. 19 DEC 7 (QUAD/MAIN ST)

DIGITAL ELECTRONIC CONTROL
(QUAD ENGINE / MAIN STATION)

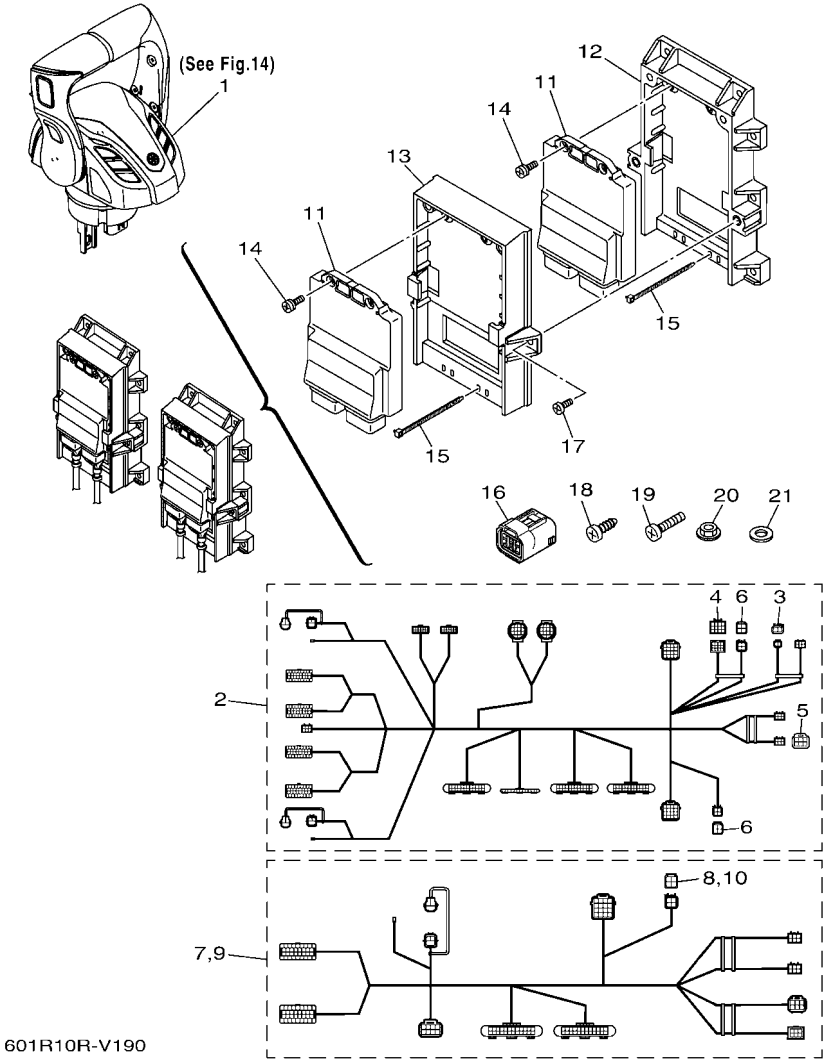

REF. NO.	PART NO.	DESCRIPTION	601R					REMARKS
1	6X9–48A02–01	REMOTE CONTROL BOX ASSY 3	1					NOT FOR SALE
2	6X9–82580–42	WIRE HARNESS ASSY 2	1					
3	68V–82582–10	.CAP 1 (2P)	1					
4	6X9–82582–00	.CAP 1 (12P)	1					
5	6X9–82582–10	.CAP 1 (6P)	1					
6	6Y8–82582–11	.CAP 1 (4PIN)	2					
7	6X9–82580–C2	WIRE HARNESS ASSY 2	1					
8	6Y8–82582–11	.CAP 1 (4PIN)	1					
9	6X9–82580–D2	WIRE HARNESS ASSY 2	1					
10	6Y8–82582–11	.CAP 1 (4PIN)	1					
11	6X6–85590–41	CONTROL UNIT ASSY	4					
12	6X9–48211–00	HOUSING,1	2					
13	6X9–4821A–00	HOUSING, 2	2					
14	97607–05212	SCREW, WITH WASHER	8					
15	90465–13M11	CLAMP	8					
16	6Y8–85371–01	END OF LINE RESISTOR	2					
17	98507–06016	SCREW, PAN HEAD	8					
18	90167–06M00	SCREW, TAPPING	16					
19	97880–06035	SCREW, PAN HEAD	16					
20	95780–06300	NUT, FLANGE	16					
21	90201–06M30	WASHER, PLATE	16					

FIG. 20 DEC 8 (FLUSH MOUNT/MAIN ST)

DIGITAL ELECTRONIC CONTROL
(FLUSH SIDE MOUNT/ MAIN STATION)

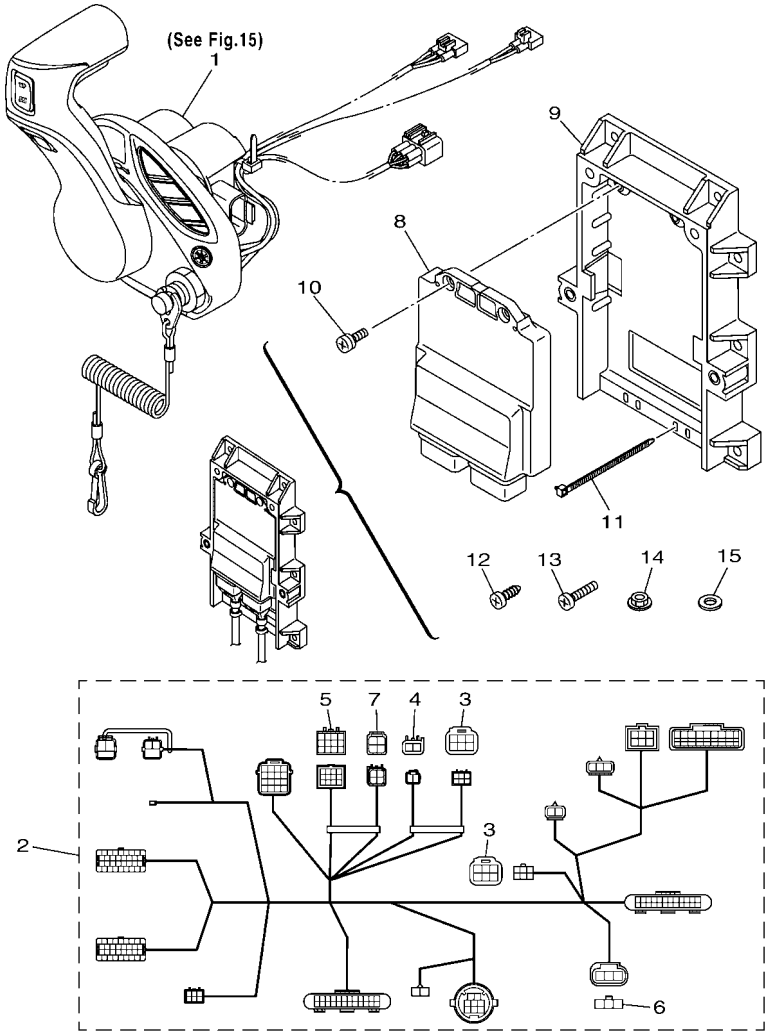

601R10R-V200

REF. NO.	PART NO.	DESCRIPTION	601R					REMARKS
1	6X9–48A00–00	REMOTE CONTROL BOX ASSY 1	1					NOT FOR SALE
2	6X9–82580–21	WIRE HARNESS ASSY 2	1					
3	6Y8–85371–01	.END OF LINE RESISTOR	2					
4	68V–82582–10	.CAP 1 (2P)	1					
5	6X9–82582–00	.CAP 1 (12P)	1					
6	6X9–82582–60	.CAP 1 (3P)	1					
7	6Y8–82582–11	.CAP 1 (4PIN)	1					
8	6X6–85590–41	CONTROL UNIT ASSY	1					
9	6X9–48211–00	HOUSING,1	1					
10	97607–05212	SCREW, WITH WASHER	2					
11	90465–13M11	CLAMP	2					
12	90167–06M00	SCREW, TAPPING	8					
13	97880–06035	SCREW, PAN HEAD	8					
14	95780–06300	NUT, FLANGE	8					
15	90201–06M30	WASHER, PLATE	8					

DIGITAL ELECTRONIC CONTROL (SINGLE ENGINE / 2ND STATION)

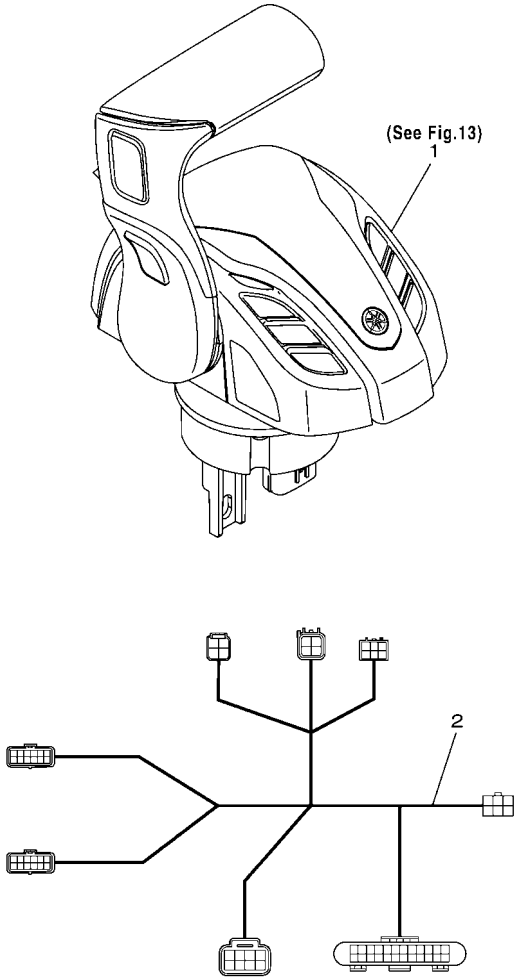

601R10R-V210

FIG. 21 DEC 9 (SINGLE/2ND ST)

REF. NO.	PART NO.	DESCRIPTION	601R					REMARKS
1	6X9–48A01–01	REMOTE CONTROL BOX ASSY 2	1					NOT FOR SALE
2	6X9–82580–10	WIRE HARNESS ASSY 2	1					

FIG. 22 DEC 10 (MULTIPLE/2ND ST)

DIGITAL ELECTRONIC CONTROL
(TWIN, TRIPLE, QUAD ENGINE / 2ND STATION)

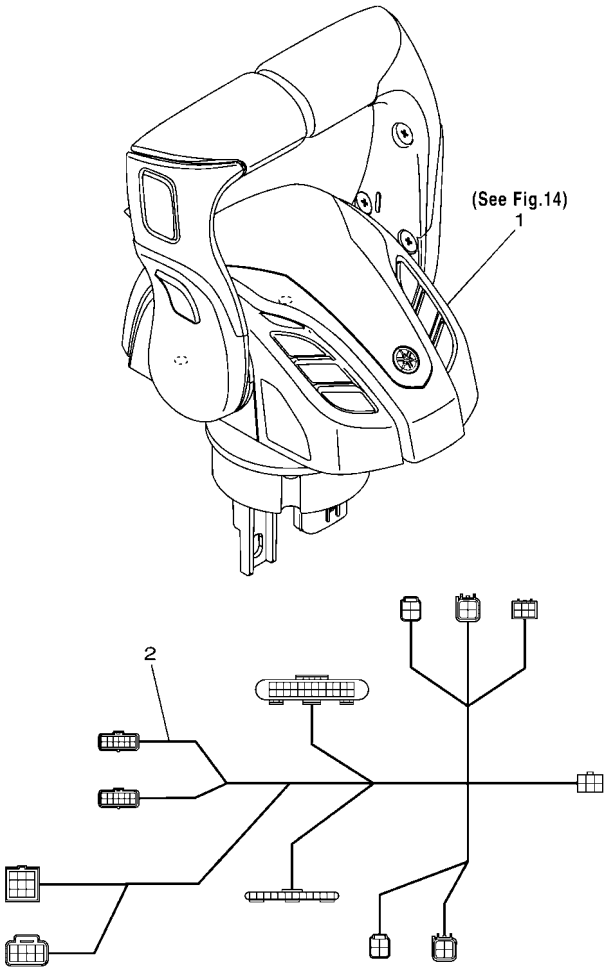

601R10R-V220

REF. NO.	PART NO.	DESCRIPTION	601R					REMARKS
1	6X9–48A02–01	REMOTE CONTROL BOX ASSY 3	1					NOT FOR SALE
2	6X9–82580–50	WIRE HARNESS ASSY 2	1					

FIG. 23 DEC 11 (FLUSH MOUNT/2ND ST)

DIGITAL ELECTRONIC CONTROL
(FLUSH SIDE MOUNT/ 2ND STATION)

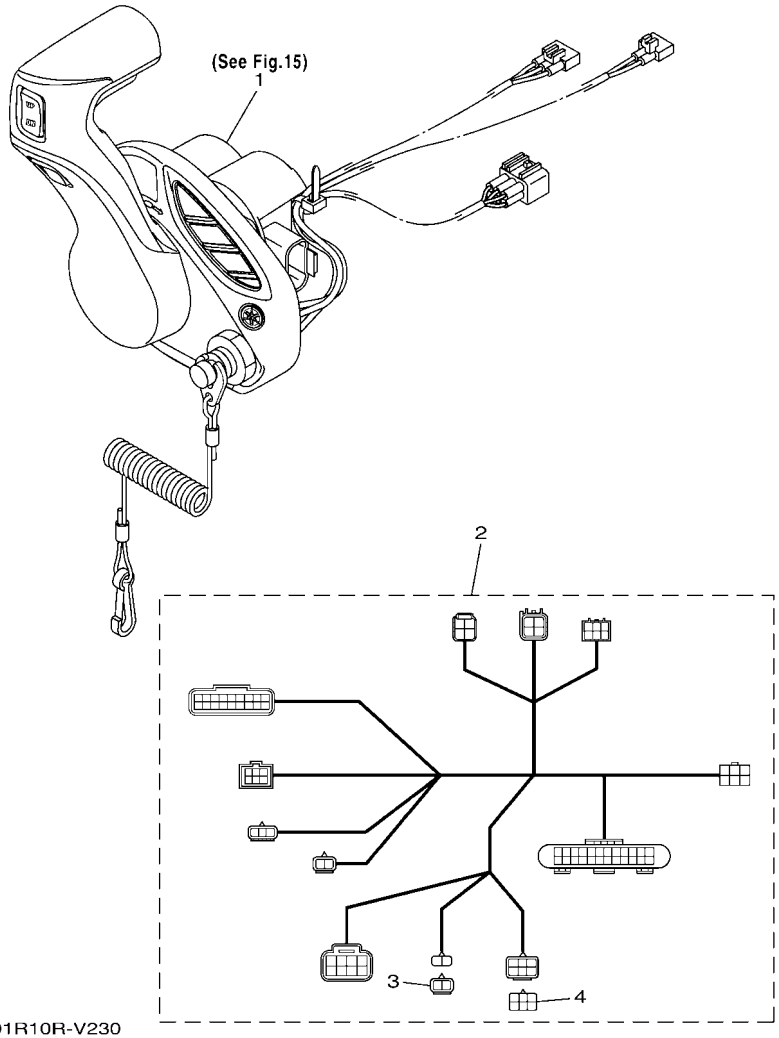

601R10R-V230

REF. NO.	PART NO.	DESCRIPTION	601R					REMARKS
1	6X9–48A00–00	REMOTE CONTROL BOX ASSY 1	1					NOT FOR SALE
2	6X9–82580–30	WIRE HARNESS ASSY 2	1					
3	6X9–82582–70	.CAP 1 (2P)	1					
4	6X9–82582–80	.CAP 1 (6P)	1					

FIG. 24 SWITCH & PANEL 1

SINGLE IG SWITCH W/ PANEL

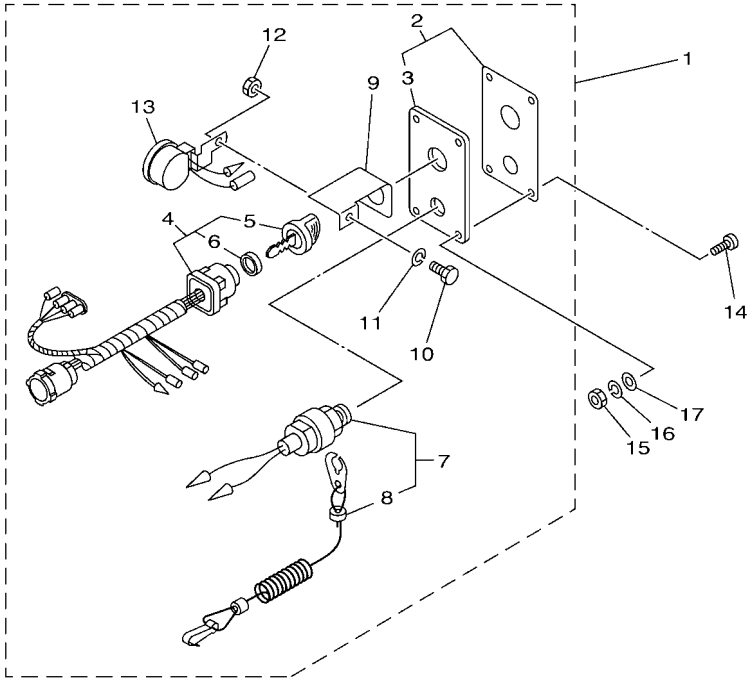

601R10R-Q230

REF. NO.	PART NO.	DESCRIPTION	601R					REMARKS
1	704–82570–13	PANEL SWITCH ASSY	1					WITH CHOKE SW.
2	704–82571–02	.PANEL, SWITCH	1					
3	6R5–82588–01	..PLATE	1					
4	704–82510–0B	.MAIN SWITCH ASSY	1					
5	703–82577–00	..CAP, KEY	1					
6	6K1–82532–00	..CAP	1					
7	688–82575–02	.ENGINE STOP SWITCH ASSY	1					
8	682–82556–00	..LANYARD, STOP SWITCH	1					
9	64D–82581–00	.STAY, CORD CLAMP	1					
10	97303–05012	.BOLT	1					
11	92903–05100	.WASHER, SPRING	1					
12	95303–05700	.NUT	1					
13	688–83383–12	.BUZZER	1					
14	90149–05M05	SCREW	4					
15	95380–05600	NUT	4					
16	92990–05100	WASHER, SPRING	4					
17	92990–05600	WASHER, PLATE	4					

FIG. 25 SWITCH & PANEL 2

SINGLE IG SWITCH W/ PANEL
(FOR PRIME START or DIGITAL NETWORK SYSTEM-6Y8)

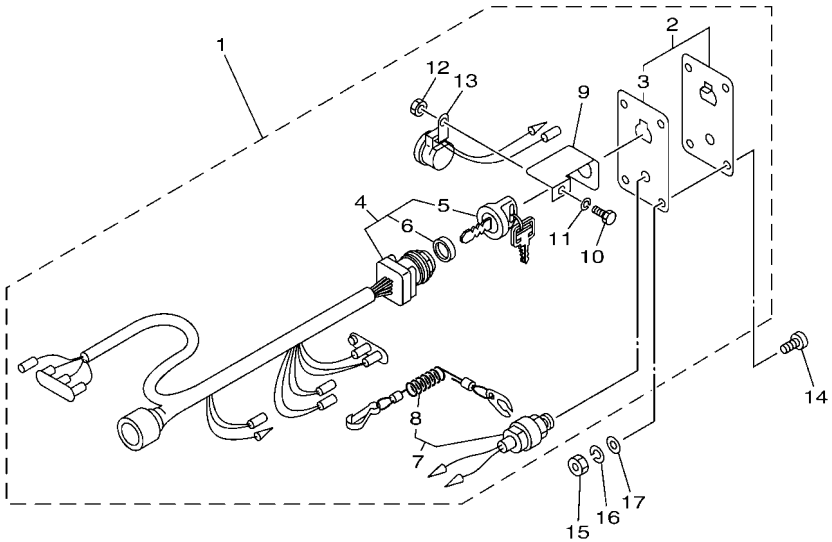

601R10R-Q240

REF. NO.	PART NO.	DESCRIPTION	601R					REMARKS
1	6R5–82570–0A	PANEL SWITCH ASSY	1					WITHOUT CHOKE SW.
2	704–82571–02	.PANEL, SWITCH	1					
3	6R5–82588–01	..PLATE	1					
4	6R5–82510–04	.MAIN SWITCH ASSY	1					
5	676–82577–01	..CAP, KEY	1					
6	703–82532–00	..CAP	1					
7	688–82575–02	.ENGINE STOP SWITCH ASSY	1					
8	682–82556–00	..LANYARD, STOP SWITCH	1					
9	64D–82581–00	.STAY, CORD CLAMP	1					
10	97303–05012	.BOLT	1					
11	92903–05100	.WASHER, SPRING	1					
12	95303–05700	.NUT	1					
13	6R5–83383–00	.BUZZER	1					
14	90149–05M05	SCREW	4					
15	95303–05600	NUT	4					
16	92903–05100	WASHER, SPRING	4					
17	92903–05600	WASHER, PLATE	4					

FIG. 26 SWITCH & PANEL 3

SINGLE IG SWITCH W/O PANEL

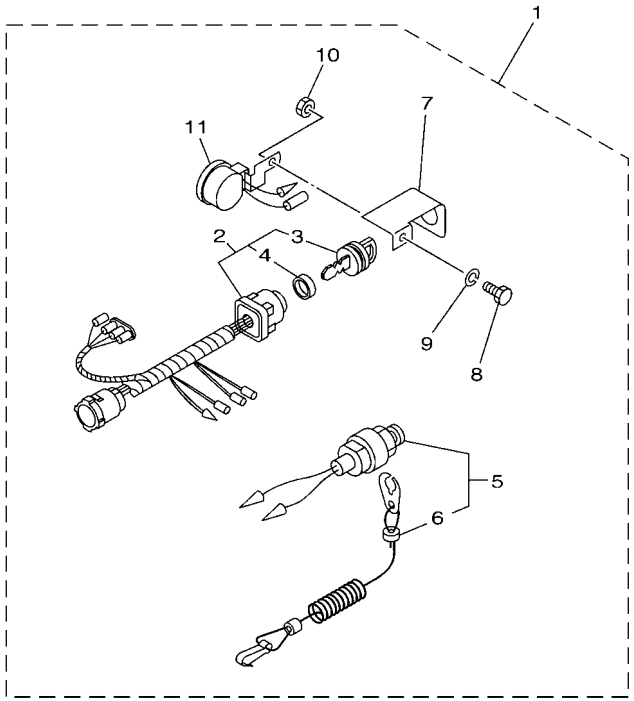

601R10R-Q250

REF. NO.	PART NO.	DESCRIPTION	601R					REMARKS
1	704–8257C–04	PANEL SWITCH COMP. 2	1					WITH CHOKE SW.
2	704–82510–0B	.MAIN SWITCH ASSY	1					
3	703–82577–00	..CAP, KEY	1					
4	6K1–82532–00	..CAP	1					
5	688–82575–02	.ENGINE STOP SWITCH ASSY	1					
6	682–82556–00	..LANYARD, STOP SWITCH	1					
7	64D–82581–00	.STAY, CORD CLAMP	1					
8	97303–05012	.BOLT	1					
9	92903–05100	.WASHER, SPRING	1					
10	95303–05700	.NUT	1					
11	688–83383–12	.BUZZER	1					

DIGITAL NETWORK SYSTEM-6Y9
(SINGLE : 1 & 2 STATION-MAIN)

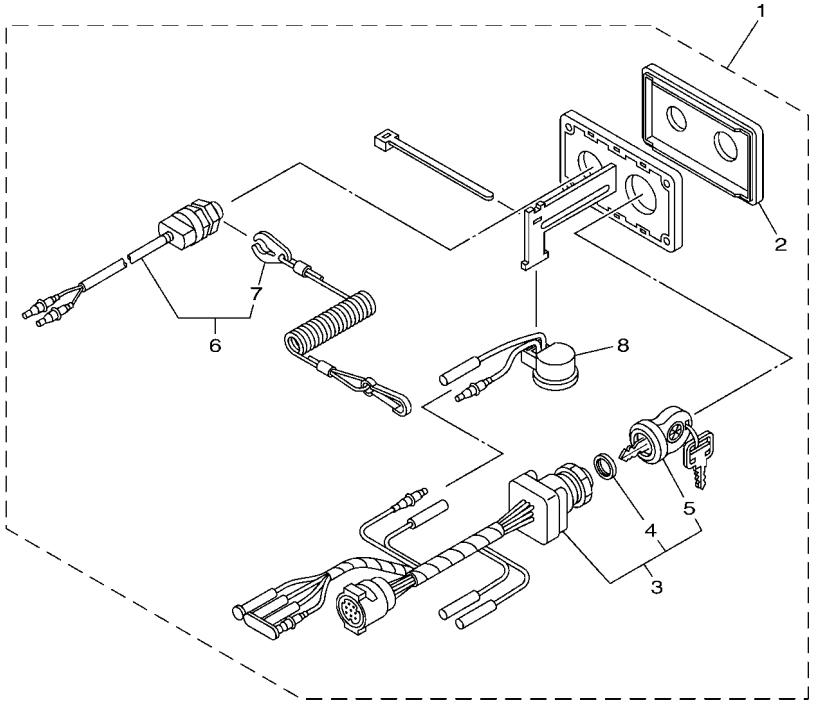

601R10R-S280

FIG. 27 SWITCH & PANEL 4

REF. NO.	PART NO.	DESCRIPTION	601R					REMARKS
1	6X6–82570–34	PANEL SWITCH ASSY	1					1 & 2 STATION MAIN
2	6X6–82571–00	.PANEL, SWITCH	1					
3	6X6–82510–02	.MAIN SWITCH ASSY	1					
4	703–82532–00	..CAP	1					
5	6X6–82511–09–A1	..KEY, MAIN SWITCH	1					UR
	6X6–82511–09–A2	..KEY, MAIN SWITCH	1					UR
	6X6–82511–09–A3	..KEY, MAIN SWITCH	1					UR
	6X6–82511–09–A4	..KEY, MAIN SWITCH	1					UR
	6X6–82511–09–A5	..KEY, MAIN SWITCH	1					UR
	6X6–82511–09–A6	..KEY, MAIN SWITCH	1					UR
	6X6–82511–09–A7	..KEY, MAIN SWITCH	1					UR
	6X6–82511–09–A8	..KEY, MAIN SWITCH	1					UR
	6X6–82511–09–A9	..KEY, MAIN SWITCH	1					UR
6	688–82575–12	.ENGINE STOP SWITCH ASSY	1					
7	682–82556–00	..LANYARD, STOP SWITCH	1					
8	703–83383–A0	.BUZZER	1					

DIGITAL NETWORK SYSTEM-6Y9
(SINGLE : 2 STATION-SUB)

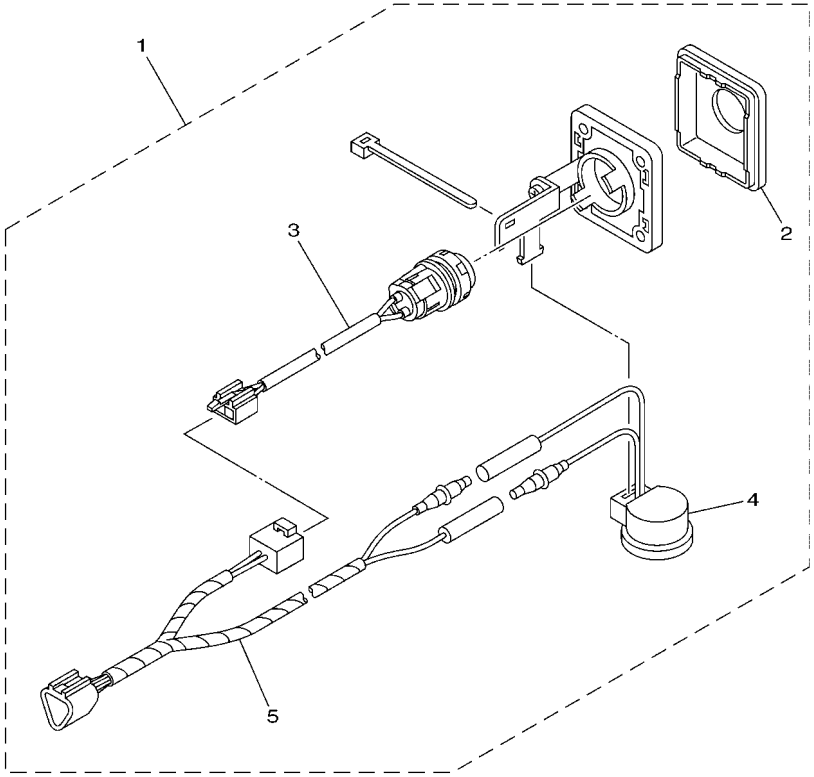

601R10R-K300

FIG. 28 SWITCH & PANEL 5

REF. NO.	PART NO.	DESCRIPTION	601R					REMARKS
1	6X6–82570–80	PANEL SWITCH ASSY	1					2 STATION SUB
2	6X6–82571–40	.PANEL, SWITCH	1					
3	6X6–8259E–20	.SWITCH ASSY	1					
4	703–83383–A0	.BUZZER	1					
5	6X6–82716–20	.CORD SWITCH	1					

FIG. 29 SWITCH & PANEL 6

TWIN IG SWITCH

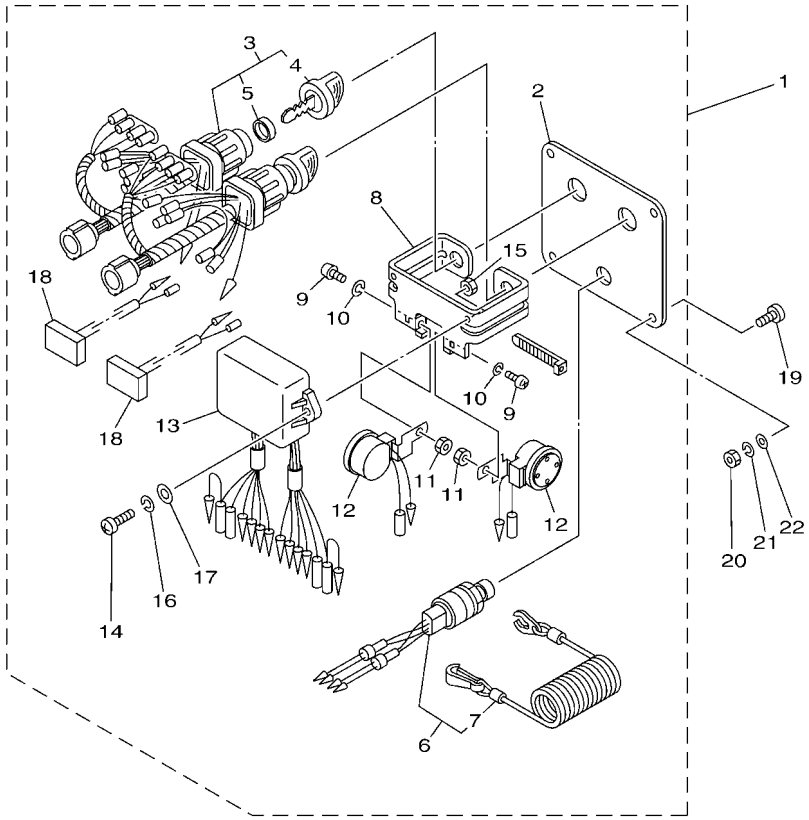

601R10R-M310

REF. NO.	PART NO.	DESCRIPTION	601R					REMARKS
1	6K1–82570–14	PANEL SWITCH ASSY	1					WITH CHOKE SW.
2	6K1–82571–02	.PLATE, PANEL SWITCH	1					
3	6K1–82510–08	.MAIN SWITCH ASSY	2					
4	703–82577–00	..CAP, KEY	1					
5	6K1–82532–00	..CAP	1					
6	6K1–82575–01	.ENGINE STOP SWITCH ASSY	1					
7	682–82556–00	..LANYARD, STOP SWITCH	1					
8	6K1–83614–01	.BRACKET	1					
9	98980–05010	.SCREW, BIND	2					
10	92990–05100	.WASHER, SPRING	2					
11	95380–05600	.NUT	2					
12	688–83383–12	.BUZZER	2					
13	6K1–85830–03	.CONTROL UNIT ASSY	1					
14	98980–06020	.SCREW, BIND	2					
15	95380–06600	.NUT, HEXAGON	2					
16	92990–06100	.WASHER, SPRING	2					
17	92990–06600	.WASHER, PLATE	2					
18	6K1–81980–00	.DIODE ASSY	2					
19	90149–05M05	SCREW	4					
20	95380–05600	NUT	4					
21	92990–05100	WASHER, SPRING	4					
22	92990–05600	WASHER, PLATE	4					

TWIN IG SWITCH

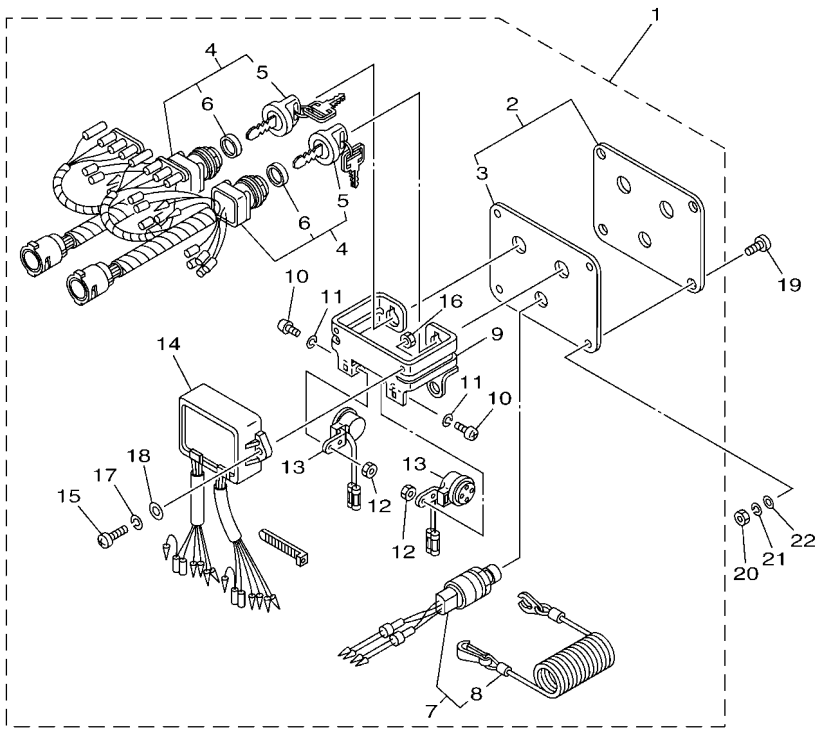

601R10R-K320

FIG. 30 SWITCH & PANEL 7

REF. NO.	PART NO.	DESCRIPTION	601R					REMARKS
1	61B–82570–07	PANEL SWITCH ASSY	1					WITHOUT CHOKE SW.
2	6K1–82571–02	.PLATE, PANEL SWITCH	1					
3	61B–82588–01	..PLATE	1					
4	61B–82510–03	.MAIN SWITCH ASSY	2					
5	676–82577–01	..CAP, KEY	1					
6	703–82532–00	..CAP	1					
7	6K1–82575–01	.ENGINE STOP SWITCH ASSY	1					
8	682–82556–00	..LANYARD, STOP SWITCH	1					
9	6K1–83614–01	.BRACKET	1					
10	98980–05010	.SCREW, BIND	2					
11	92990–05100	.WASHER, SPRING	2					
12	95380–05600	.NUT	2					
13	6R5–83383–00	.BUZZER	2					
14	61B–85830–02	.CONTROL UNIT ASSY	1					
15	98980–06020	.SCREW, BIND	2					
16	95380–06600	.NUT, HEXAGON	2					
17	92990–06100	.WASHER, SPRING	2					
18	92990–06600	.WASHER, PLATE	2					
19	90149–05M05	SCREW	4					
20	95380–05600	NUT	4					
21	92990–05100	WASHER, SPRING	4					
22	92990–05600	WASHER, PLATE	4					

TWIN IG SWITCH
(FOR DIGITAL NETWORK SYSTEM-6Y8)

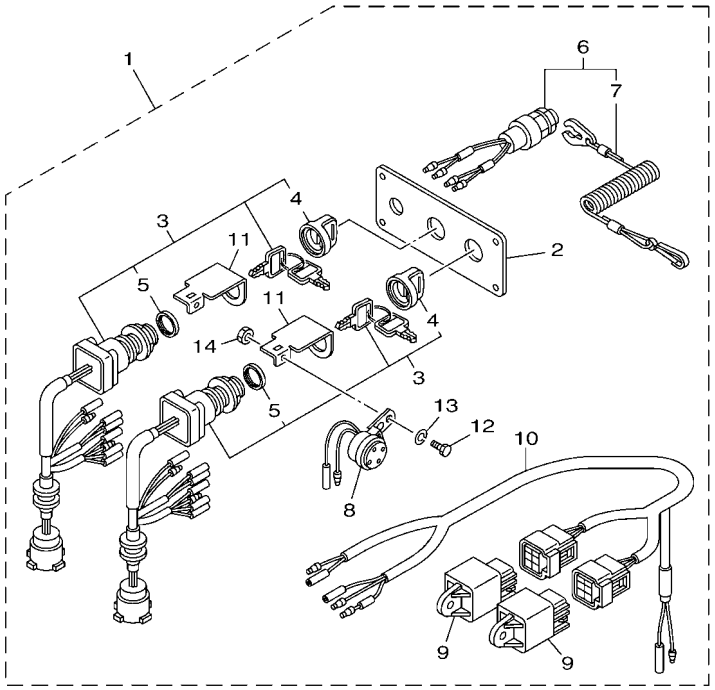

601R10R-M330

FIG. 31 SWITCH & PANEL 8

REF. NO.	PART NO.	DESCRIPTION	601R					REMARKS
1	6Y8–82570–05	PANEL SWITCH ASSY	1					1 & 2 STATION MAIN
2	6Y8–82571–01	.PLATE, PANEL SWITCH	1					
3	6Y8–82510–03	.MAIN SWITCH ASSY	2					
4	676–82577–01	..CAP, KEY	1					
5	703–82532–00	..CAP	1					
6	6K1–82575–01	.ENGINE STOP SWITCH ASSY	1					
7	682–82556–00	..LANYARD, STOP SWITCH	1					
8	6R5–83383–00	.BUZZER	2					
9	68V–81950–00	.RELAY ASSY	2					
10	6Y8–82507–00	.LEAD, IGNITION SWITCH RELAY	1					
11	64D–82581–00	.STAY, CORD CLAMP	2					
12	97003–05012	.BOLT	2					
13	92903–05100	.WASHER, SPRING	2					
14	95303–05700	.NUT	2					

DIGITAL NETWORK SYSTEM-6Y9
(TWIN : 1 & 2 STATION-MAIN)

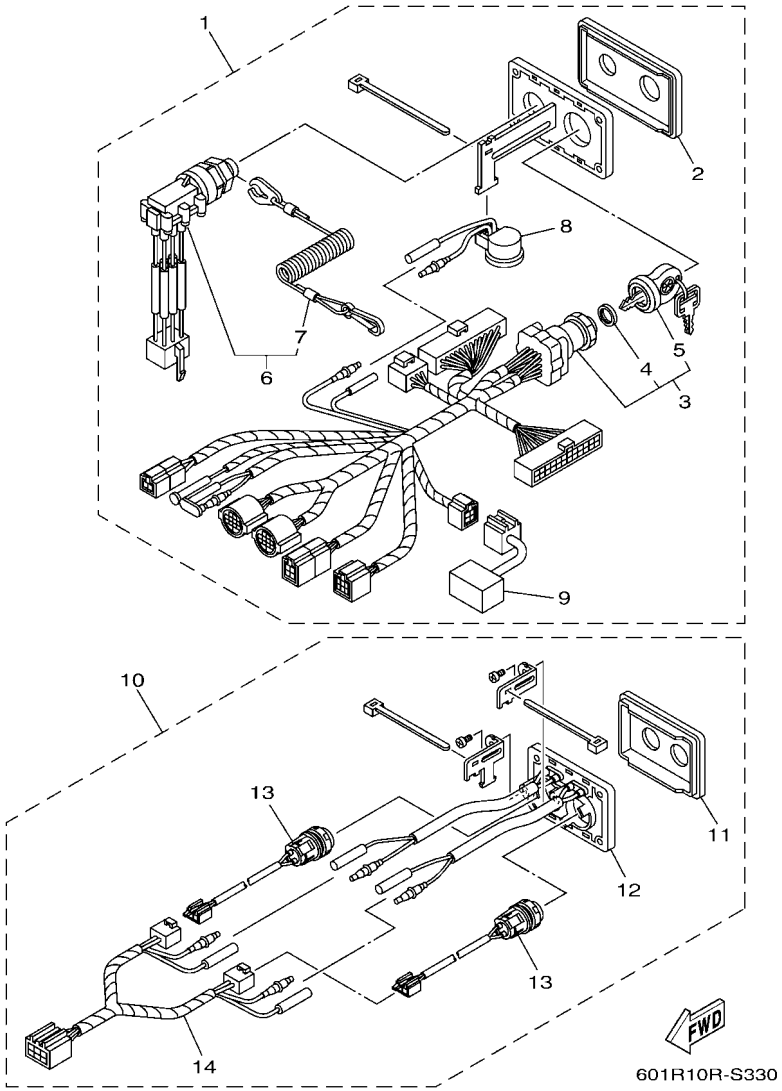

FIG. 32 SWITCH & PANEL 9

REF. NO.	PART NO.	DESCRIPTION	601R					REMARKS
1	6X6–82570–41	PANEL SWITCH ASSY	1					1 & 2 STATION MAIN
2	6X6–82571–10	.PANEL, SWITCH	1					
3	6X6–82510–11	.MAIN SWITCH ASSY	1					
4	703–82532–00	..CAP	1					
5	6X6–82511–09–A1	..KEY, MAIN SWITCH	1					UR
	6X6–82511–09–A2	..KEY, MAIN SWITCH	1					UR
	6X6–82511–09–A3	..KEY, MAIN SWITCH	1					UR
	6X6–82511–09–A4	..KEY, MAIN SWITCH	1					UR
	6X6–82511–09–A5	..KEY, MAIN SWITCH	1					UR
	6X6–82511–09–A6	..KEY, MAIN SWITCH	1					UR
	6X6–82511–09–A7	..KEY, MAIN SWITCH	1					UR
	6X6–82511–09–A8	..KEY, MAIN SWITCH	1					UR
	6X6–82511–09–A9	..KEY, MAIN SWITCH	1					UR
6	6X6–82575–10	.ENGINE STOP SWITCH ASSY	1					
7	682–82556–00	..LANYARD, STOP SWITCH	1					
8	703–83383–A0	.BUZZER	1					
9	6X6–81980–00	.DIODE ASSY	1					
10	6X6–82570–60	PANEL SWITCH ASSY	1					1 & 2 STATION MAIN
11	6X6–82571–20	.PANEL, SWITCH	1					
12	6X6–83720–00	.L.E.D ASS'Y	1					
13	6X6–8259E–20	.SWITCH ASSY	2					
14	6X6–82716–00	.CORD SWITCH	1					

DIGITAL NETWORK SYSTEM-6Y9
(TWIN : 2 STATION-SUB)

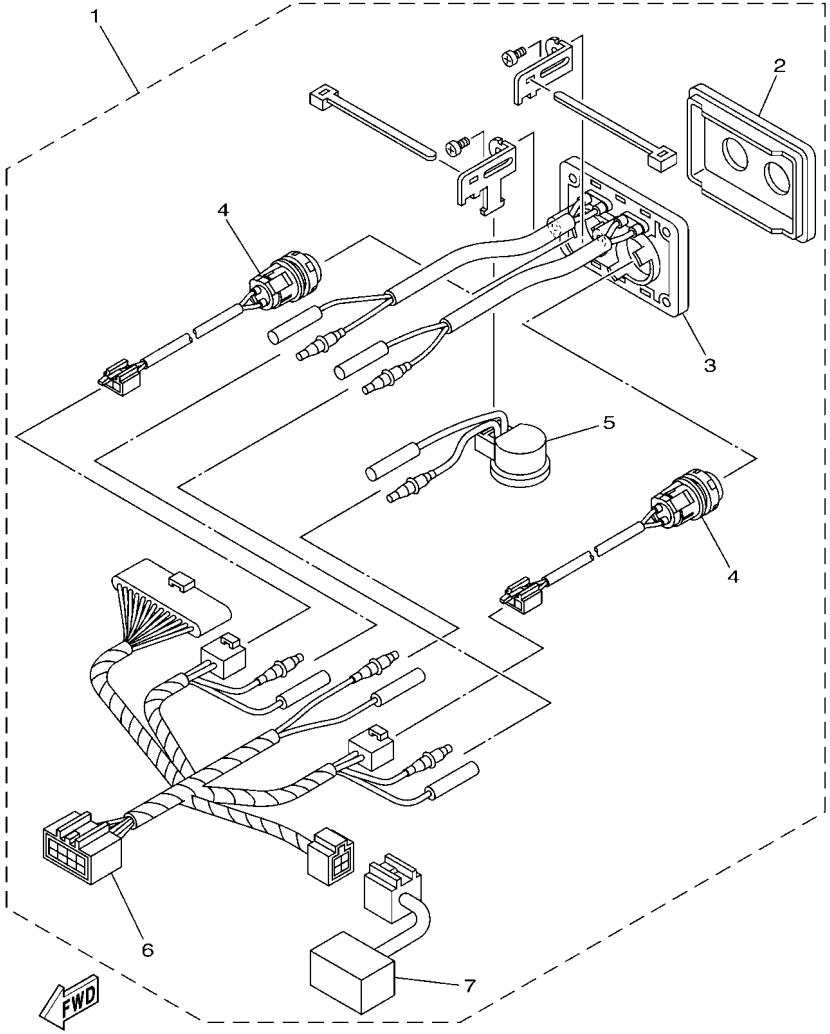

601R10R-S340

FIG. 33 SWITCH & PANEL 10

REF. NO.	PART NO.	DESCRIPTION	601R					REMARKS
1	6X6–82570–E0	PANEL SWITCH ASSY	1					2 STATION SUB
2	6X6–82571–20	.PANEL, SWITCH	1					
3	6X6–83720–00	.L.E.D ASS'Y	1					
4	6X6–8259E–20	.SWITCH ASSY	2					
5	703–83383–A0	.BUZZER	1					
6	6X6–82716–40	.CORD SWITCH	1					
7	6X6–81980–00	.DIODE ASSY	1					

TRIPLE IG SWITCH
(FOR DIGITAL NETWORK SYSTEM-6Y8)

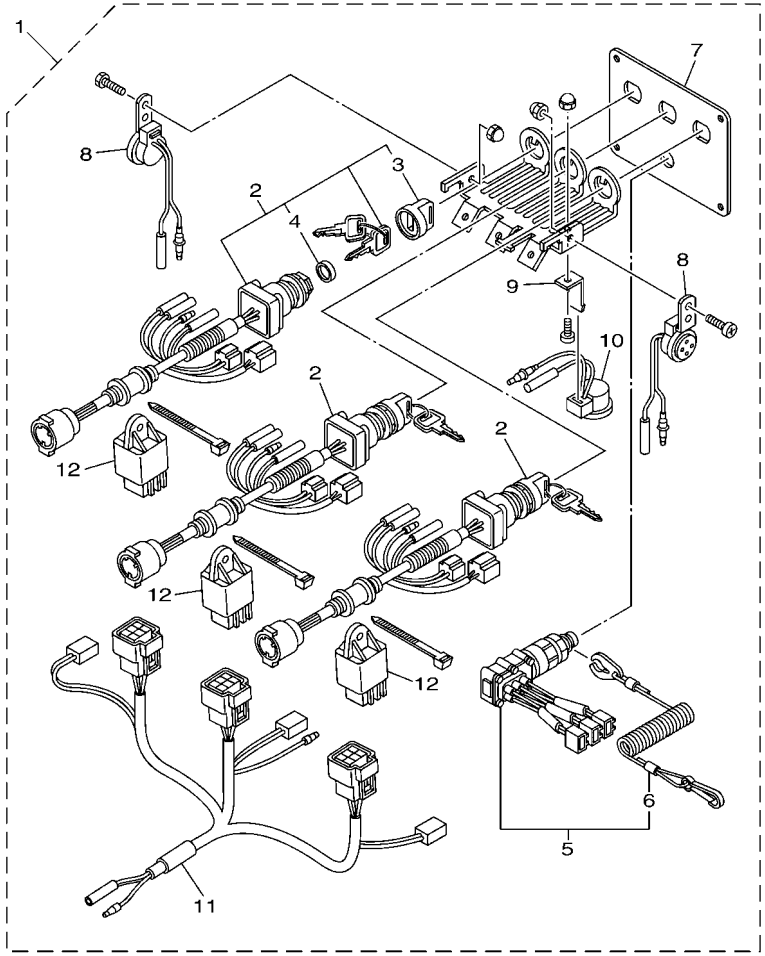

601R10R-K360

FIG. 34 SWITCH & PANEL 11

REF. NO.	PART NO.	DESCRIPTION	601R					REMARKS
1	6X5–82570–03	PANEL SWITCH ASSY	1					1 & 2 STATION MAIN
2	6X5–82510–02	.MAIN SWITCH ASSY	3					
3	676–82577–01	..CAP, KEY	1					
4	703–82532–00	..CAP	1					
5	6X5–82575–00	.ENGINE STOP SWITCH ASSY	1					
6	682–82556–00	..LANYARD, STOP SWITCH	1					
7	6X5–82571–00	.PANEL, SWITCH	1					
8	6X5–83383–00	.BUZZER	2					
9	6X5–82581–00	.STAY, CORD CLAMP	1					
10	6X4–83383–00	.BUZZER	1					
11	6X5–82507–00	.WIRE, LEAD	1					
12	68V–81950–00	.RELAY ASSY	3					

DIGITAL NETWORK SYSTEM-6Y9
(TRIPLE :1 & 2 STATION-MAIN)

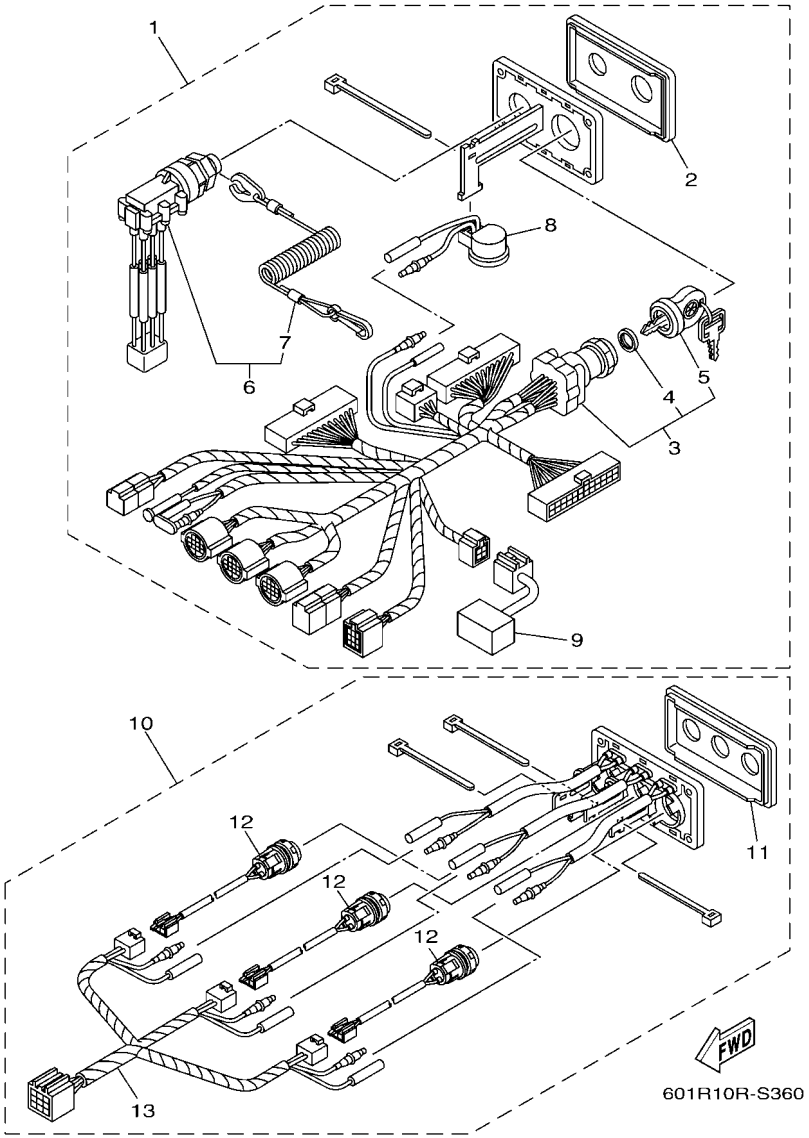

FIG. 35 SWITCH & PANEL 12

REF. NO.	PART NO.	DESCRIPTION	601R					REMARKS
1	6X6–82570–51	PANEL SWITCH ASSY	1					1 & 2 STATION MAIN
2	6X6–82571–10	.PANEL, SWITCH	1					
3	6X6–82510–21	.MAIN SWITCH ASSY	1					
4	703–82532–00	..CAP	1					
5	6X6–82511–09–A1	..KEY, MAIN SWITCH	1					UR
	6X6–82511–09–A2	..KEY, MAIN SWITCH	1					UR
	6X6–82511–09–A3	..KEY, MAIN SWITCH	1					UR
	6X6–82511–09–A4	..KEY, MAIN SWITCH	1					UR
	6X6–82511–09–A5	..KEY, MAIN SWITCH	1					UR
	6X6–82511–09–A6	..KEY, MAIN SWITCH	1					UR
	6X6–82511–09–A7	..KEY, MAIN SWITCH	1					UR
	6X6–82511–09–A8	..KEY, MAIN SWITCH	1					UR
	6X6–82511–09–A9	..KEY, MAIN SWITCH	1					UR
6	6X6–82575–10	.ENGINE STOP SWITCH ASSY	1					
7	682–82556–00	..LANYARD, STOP SWITCH	1					
8	703–83383–A0	.BUZZER	1					
9	6X6–81980–00	.DIODE ASSY	1					
10	6X6–82570–70	PANEL SWITCH ASSY	1					1 & 2 STATION MAIN
11	6X6–82571–30	.PANEL, SWITCH	1					
12	6X6–8259E–20	.SWITCH ASSY	3					
13	6X6–82716–10	.CORD SWITCH	1					

DIGITAL NETWORK SYSTEM-6Y9
(TRIPLE : 2 STATION-SUB)

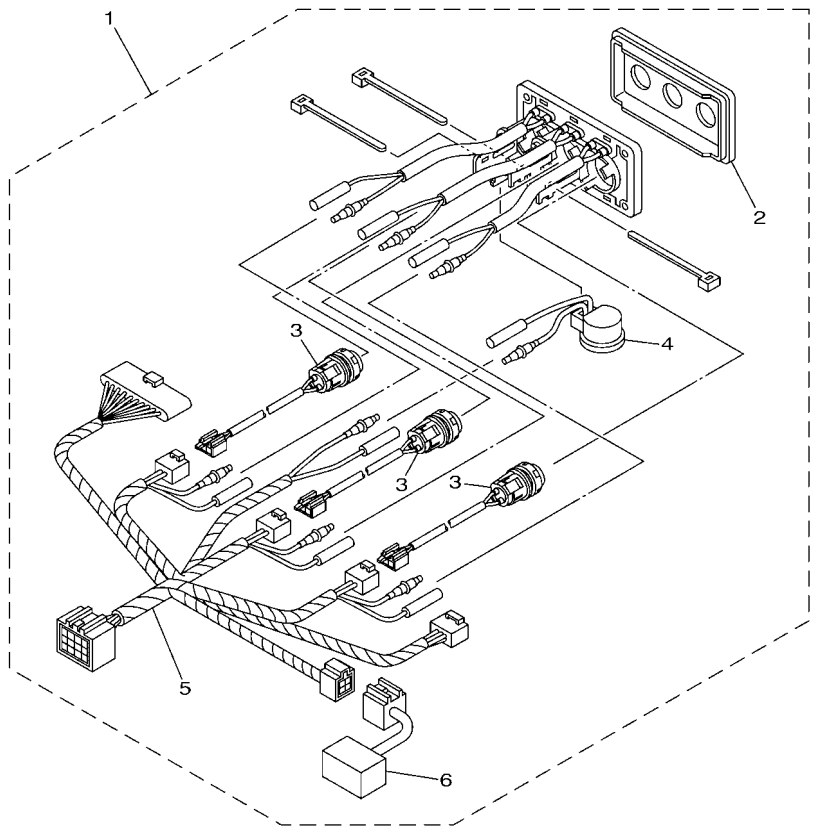

601R10R-K380

FIG. 36 SWITCH & PANEL 13

REF. NO.	PART NO.	DESCRIPTION	601R					REMARKS
1	6X6–82570–F0	PANEL SWITCH ASSY	1					2 STATION SUB
2	6X6–82571–30	.PANEL, SWITCH	1					
3	6X6–8259E–20	.SWITCH ASSY	3					
4	703–83383–A0	.BUZZER	1					
5	6X6–82716–50	.CORD SWITCH	1					
6	6X6–81980–00	.DIODE ASSY	1					

DIGITAL NETWORK SYSTEM-6Y9
(SINGLE / TWIN / TRIPLE-2 STATION)

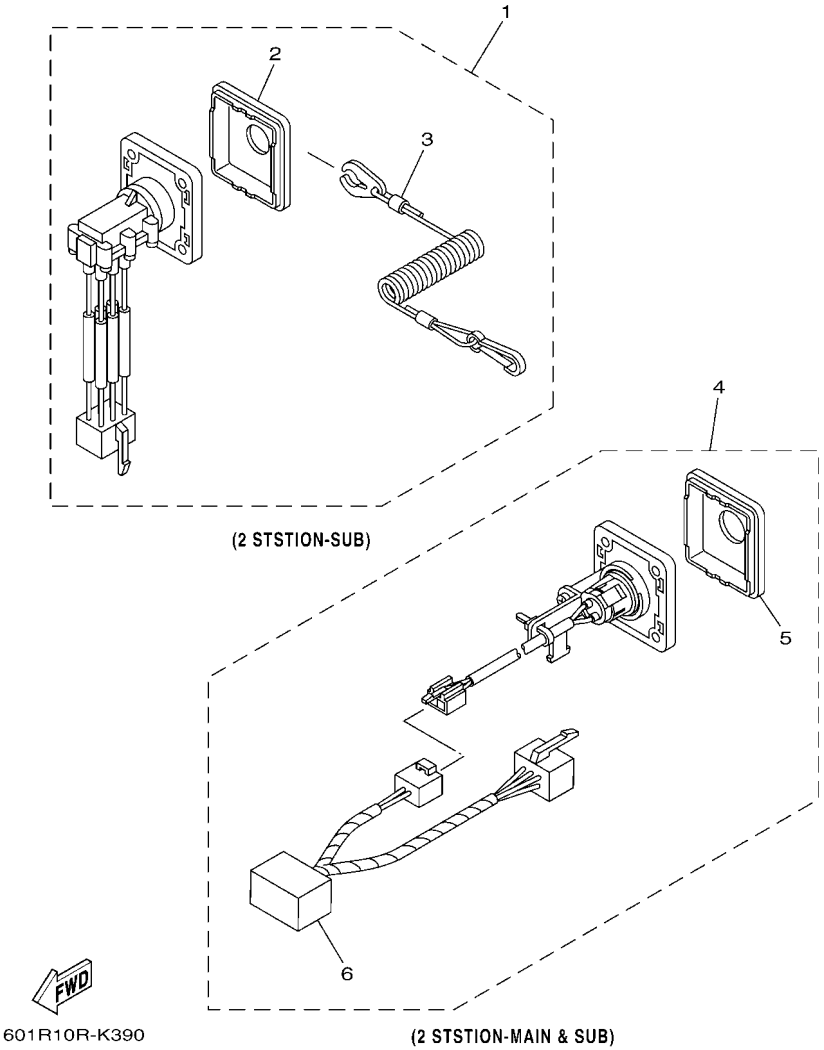

FIG. 37 SWITCH & PANEL 14

REF. NO.	PART NO.	DESCRIPTION	601R					REMARKS
1	6X6–82570–90	PANEL SWITCH ASSY	1					2 STATION SUB
2	6X6–82571–50	.PANEL, SWITCH	1					
3	682–82556–00	.LANYARD, STOP SWITCH	1					
4	6X6–82570–B0	PANEL SWITCH ASSY	2					2 STATION MAIN & SUB
5	6X6–82571–70	.PANEL, SWITCH	1					
6	6X6–81980–10	.DIODE ASSY	1					

DIGITAL NETWORK SYSTEM-6Y9
(ALL ENGINE START/STOP)

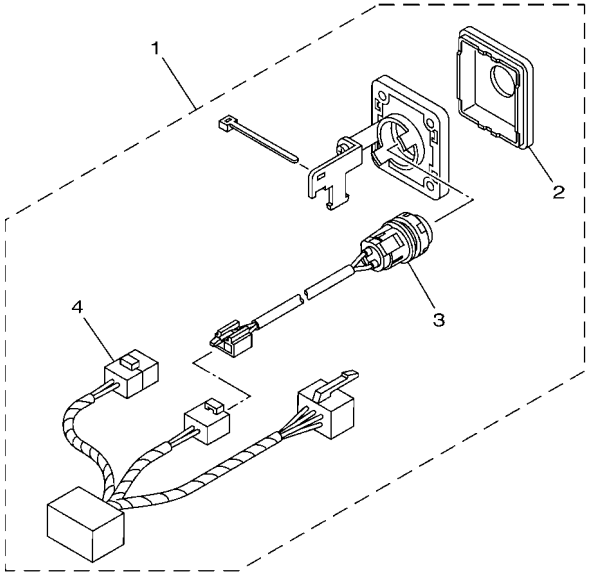

601R10R-V380

FIG. 38 SWITCH & PANEL 15

REF. NO.	PART NO.	DESCRIPTION	601R					REMARKS
1	6X6–82570–D0	PANEL SWITCH ASSY	1					FOR TWIN,TRIPLE
2	6X6–82571–60	.PANEL, SWITCH	1					
3	6X6–8259E–20	.SWITCH ASSY	1					
4	6X6–81980–40	.DIODE ASSY	1					

FIG. 39 SWITCH & PANEL 16

DIGITAL NETWORK SYSTEM-6Y9
(QUAD : 1 & 2 STATION-MAIN)

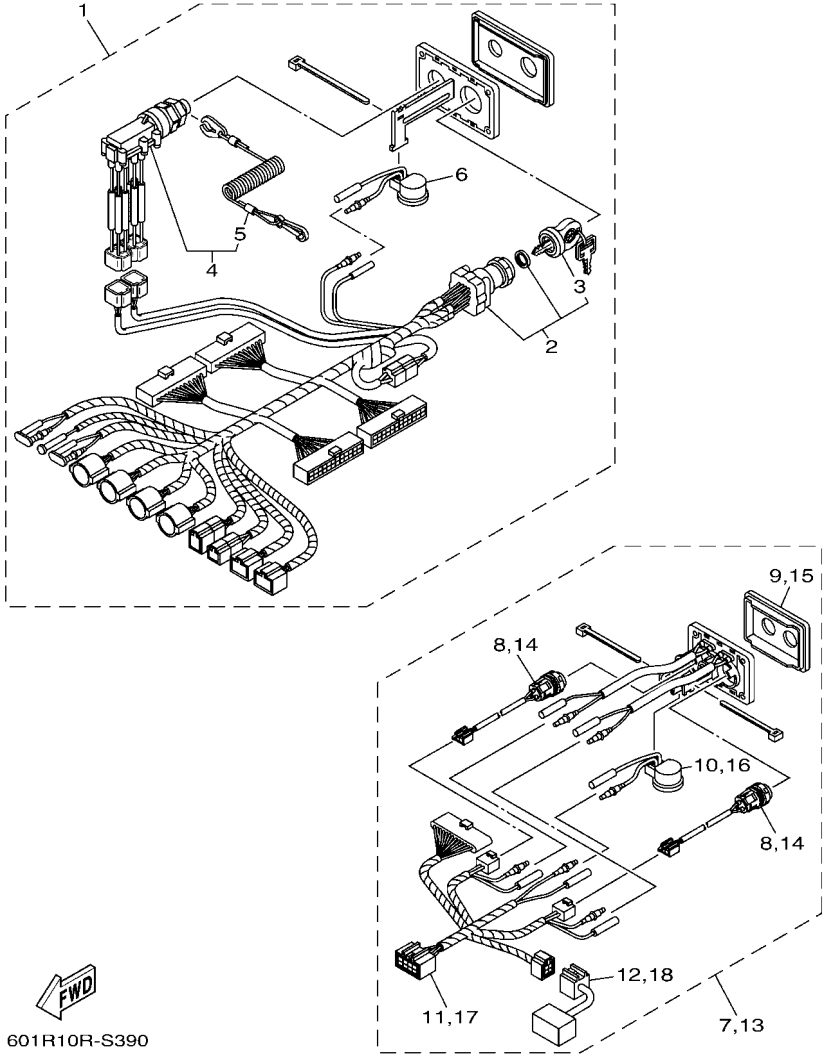

601R10R-S390

REF. NO.	PART NO.	DESCRIPTION	601R					REMARKS
1	6X6–82570–G1	PANEL SWITCH ASSY	1					1 & 2 STATION MAIN
2	6X6–82510–41	.MAIN SWITCH ASSY	1					
3	6X6–82511–09–A1	.KEY, MAIN SWITCH	1					UR
	6X6–82511–09–A2	.KEY, MAIN SWITCH	1					UR
	6X6–82511–09–A3	.KEY, MAIN SWITCH	1					UR
	6X6–82511–09–A4	.KEY, MAIN SWITCH	1					UR
	6X6–82511–09–A5	.KEY, MAIN SWITCH	1					UR
	6X6–82511–09–A6	.KEY, MAIN SWITCH	1					UR
	6X6–82511–09–A7	.KEY, MAIN SWITCH	1					UR
	6X6–82511–09–A8	.KEY, MAIN SWITCH	1					UR
	6X6–82511–09–A9	.KEY, MAIN SWITCH	1					UR
4	6ES–82575–10	.ENGINE STOP SWITCH ASSY	1					
5	682–82556–00	..LANYARD, STOP SWITCH	1					
6	703–83383–A0	.BUZZER	1					
7	6X6–82570–J0	PANEL SWITCH ASSY (PORT-P/CP)	1					1 & 2 STATION MAIN
8	6X6–8259E–20	.SWITCH ASSY	2					
9	6X6–82571–80	.PANEL, SWITCH	1					
10	703–83383–A0	.BUZZER	1					
11	6X6–82716–40	.CORD SWITCH	1					
12	6X6–81980–00	.DIODE ASSY	1					
13	6X6–82570–K0	PANEL SWITCH ASSY (STBD-CS/S)	1					1 & 2 STATION MAIN
14	6X6–8259E–20	.SWITCH ASSY	2					
15	6X6–82571–90	.PANEL, SWITCH	1					
16	703–83383–A0	.BUZZER	1					
17	6X6–82716–40	.CORD SWITCH	1					
18	6X6–81980–00	.DIODE ASSY	1					

FIG. 40 SWITCH & PANEL 17

DIGITAL NETWORK SYSTEM-6Y9
(QUAD : 2 STATION-SUB)

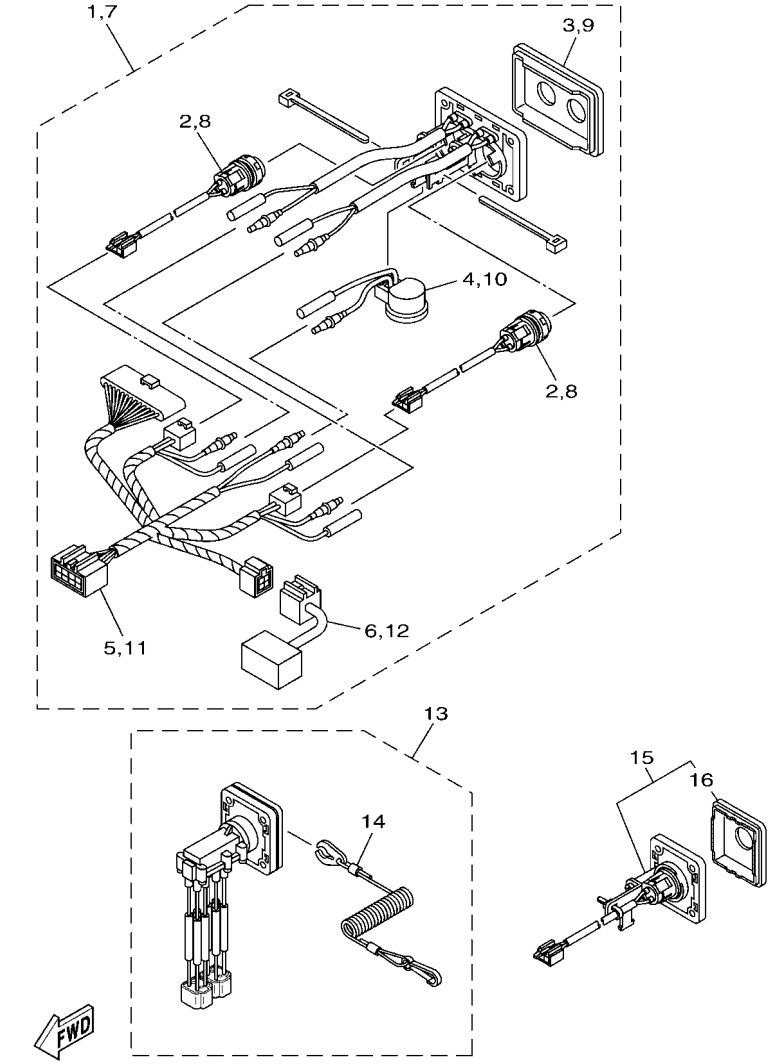

601R10R-R380

REF. NO.	PART NO.	DESCRIPTION	601R					REMARKS
1	6X6–82570–J0	PANEL SWITCH ASSY (PORT-P/CP)	1					2 STATION SUB
2	6X6–8259E–20	.SWITCH ASSY	2					
3	6X6–82571–80	.PANEL, SWITCH	1					
4	703–83383–A0	.BUZZER	1					
5	6X6–82716–40	.CORD SWITCH	1					
6	6X6–81980–00	.DIODE ASSY	1					
7	6X6–82570–K0	PANEL SWITCH ASSY (STBD-CS/S)	1					2 STATION SUB
8	6X6–8259E–20	.SWITCH ASSY	2					
9	6X6–82571–90	.PANEL, SWITCH	1					
10	703–83383–A0	.BUZZER	1					
11	6X6–82716–40	.CORD SWITCH	1					
12	6X6–81980–00	.DIODE ASSY	1					
13	6ES–82570–00	ENGINE STOP SWITCH ASSY (QUAD)	1					2 STATION SUB
14	682–82556–00	.LANYARD, STOP SWITCH	1					
15	6X6–82570–L0	PANEL SWITCH ASSY	1					2 STATION MAIN & SUB
16	6X6–82571–70	.PANEL, SWITCH	1					

IG SWITCH W/ PANEL

Part No.	Remarks
64D-82570-06	With bullet connectors for emergency stop switch
64D-82570-23	With 2-pin coupler for emergency stop switch, For 6X3 and 6X7 remote control

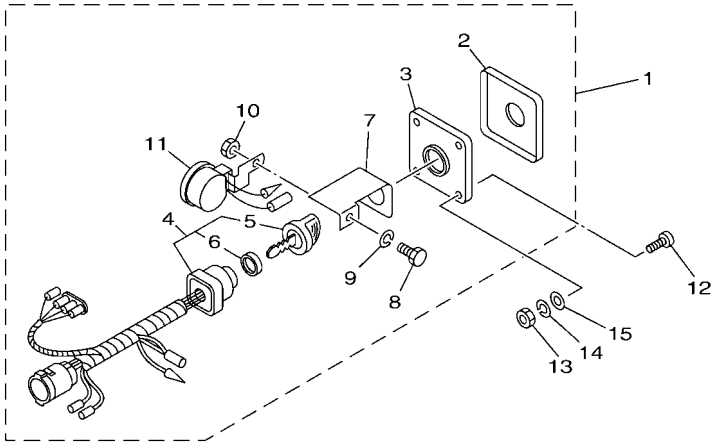

EMERGENCY STOP SWITCH W/ PANEL

Part No.	Remarks
64D-82570-11	With bullet connectors for stop switch
64D-82570-31	With 2-pin coupler for stop switch

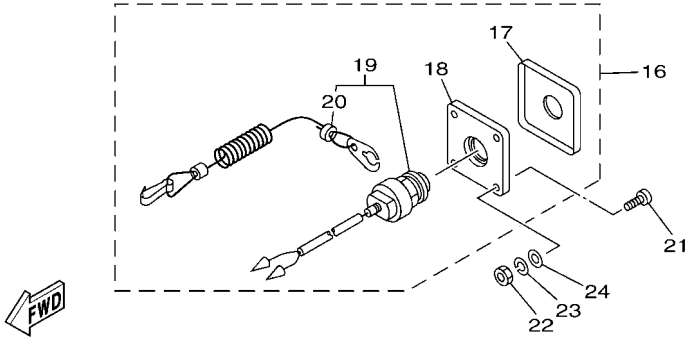

601R10R-V410

FIG. 41 SWITCH & PANEL 18

REF. NO.	PART NO.	DESCRIPTION	601R					REMARKS
1	64D–82570–06	PANEL SWITCH ASSY	1					UR
	64D–82570–23	PANEL SWITCH ASSY	1					UR
2	64D–82571–00	.PANEL, SWITCH	1					
3	64D–82588–00	.PLATE	1					
4	64D–82510–05	.MAIN SWITCH ASSY	1					FOR 64D-82570-06
	64D–82510–21	.MAIN SWITCH ASSY	1					FOR 64D-82570-23
5	703–82577–00	..CAP, KEY	1					
6	6K1–82532–00	..CAP	1					
7	64D–82581–00	.STAY, CORD CLAMP	1					
8	97303–05012	.BOLT	1					
9	92903–05100	.WASHER, SPRING	1					
10	95303–05700	.NUT	1					
11	688–83383–12	.BUZZER	1					
12	90149–05M05	SCREW	4					
13	95380–05600	NUT	4					
14	92990–05100	WASHER, SPRING	4					
15	92990–05600	WASHER, PLATE	4					
16	64D–82570–11	PANEL SWITCH ASSY	1					UR
	64D–82570–31	PANEL SWITCH ASSY	1					UR
17	64D–82571–10	.PANEL, SWITCH	1					
18	64D–82588–10	.PLATE	1					
19	64D–82575–01	.ENGINE STOP SWITCH ASSY	1					FOR 64D-82570-11
	64D–82575–11	.ENGINE STOP SWITCH ASSY	1					FOR 64D-82570-31
20	682–82556–00	..LANYARD, STOP SWITCH	1					
21	90149–05M05	SCREW	4					
22	95380–05600	NUT	4					
23	92990–05100	WASHER, SPRING	4					

IG SWITCH W/ PANEL

Part No.	Remarks
64D-82570-06	With bullet connectors for emergency stop switch
64D-82570-23	With 2-pin coupler for emergency stop switch, For 6X3 and 6X7 remote control

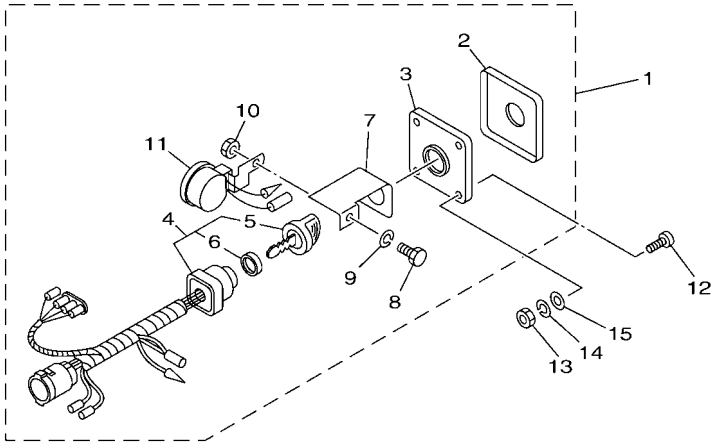

EMERGENCY STOP SWITCH W/ PANEL

Part No.	Remarks
64D-82570-11	With bullet connectors for stop switch
64D-82570-31	With 2-pin coupler for stop switch

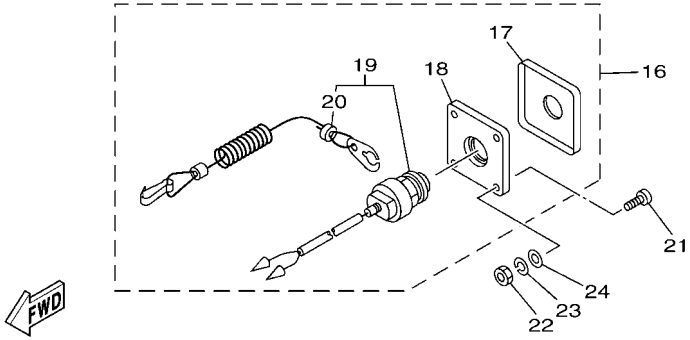

601R10R-V410

FIG. 41 SWITCH & PANEL 18

REF. NO.	PART NO.	DESCRIPTION	601R					REMARKS
24	92990–05600	WASHER, PLATE	4					

IG SWITCH W/O PANEL

Ref. No.	Part No.	Remarks
1	704-82510-0B	With bullet connectors for stop switch
4	6X3-8257B-02	With 2-pin coupler for stop switch, For 6X3 and 6X7 remote control

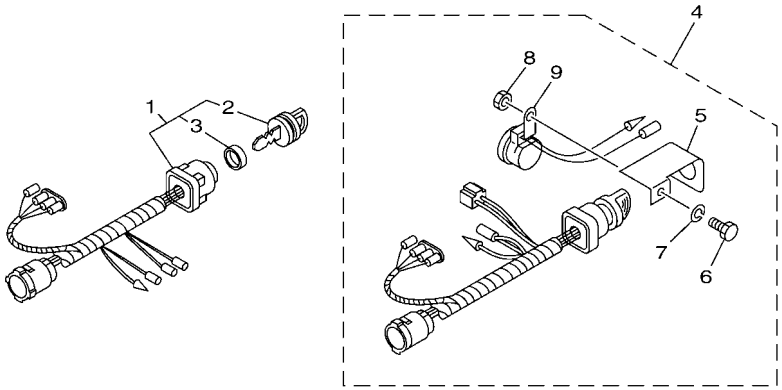

EMERGENCY STOP SWITCH W/O PANEL

Ref. No.	Part No.	Remarks
10	688-82575-12	With bullet connectors for stop switch
12	64D-82575-11	With 2-pin coupler for stop switch

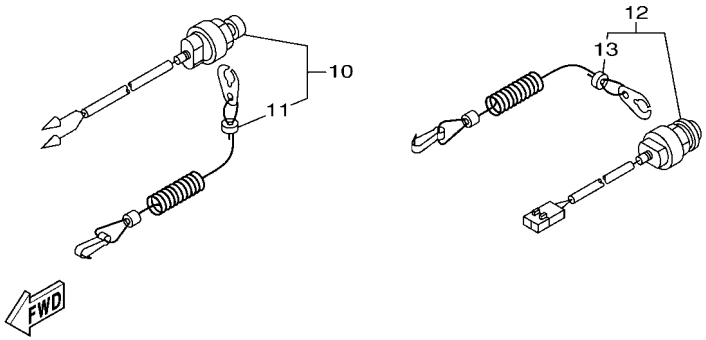

601R10R-V420

FIG. 42 SWITCH & PANEL 19

REF. NO.	PART NO.	DESCRIPTION	601R					REMARKS
1	704–82510–0B	MAIN SWITCH ASSY	1					
2	703–82577–00	.CAP, KEY	1					
3	6K1–82532–00	.CAP	1					
4	6X3–8257B–02	PANEL SWITCH COMP.	1					
5	64D–82581–00	.STAY, CORD CLAMP	1					
6	97303–05012	.BOLT	1					
7	92903–05100	.WASHER, SPRING	1					
8	95303–05700	.NUT	1					
9	6R5–83383–00	.BUZZER	1					
10	688–82575–12	ENGINE STOP SWITCH ASSY	1					
11	682–82556–00	.LANYARD, STOP SWITCH	1					
12	64D–82575–11	ENGINE STOP SWITCH ASSY	1					
13	682–82556–00	.LANYARD, STOP SWITCH	1					

ADAPTER FOR EMERGENCY STOP SWITCH LEAD

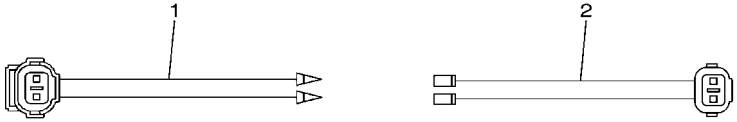

ENGINE SHUT-OFF LANYARD (CORD)

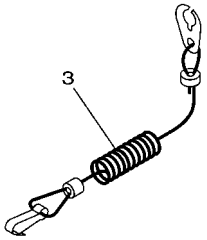

PT/T SWITCH PANEL
(FOR PTT MODELS)

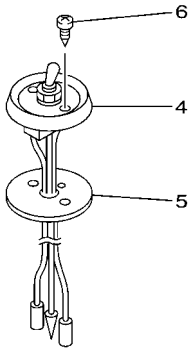

6011100-G330

FIG. 43 SWITCH & PANEL 20

REF. NO.	PART NO.	DESCRIPTION	601R					REMARKS
1	6X3–81971–00	WIRE, LEAD	1					
2	6X3–81971–10	WIRE, LEAD	1					
3	682–82556–00	LANYARD, STOP SWITCH	1					
4	688–82563–10	TRIM & TILT SWITCH ASSY	1					
5	688–82388–00	PLATE	1					
6	97780–40116	SCREW, TAPPING	2					

SWITCH PANEL HARNESS

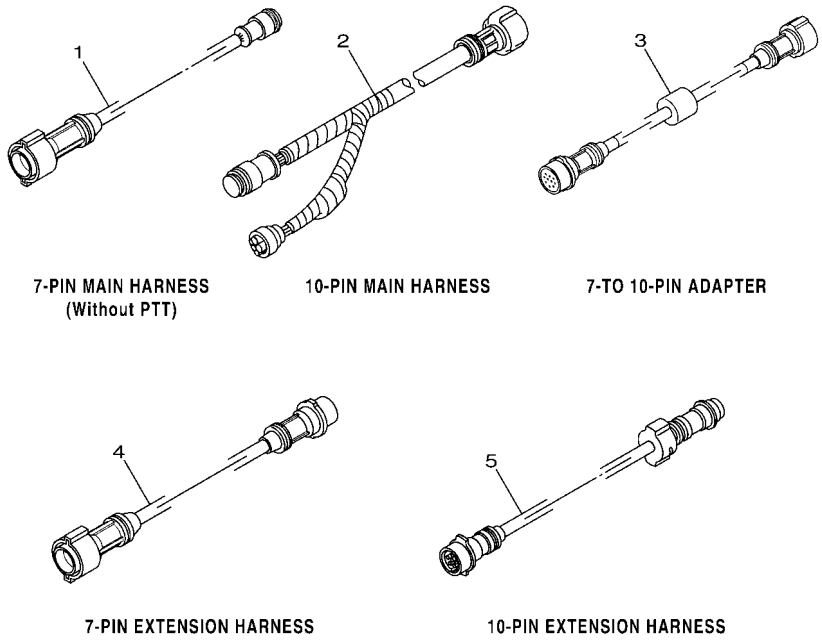

601R10R-P430

FIG. 44 WIRE HARNESS 1

REF. NO.	PART NO.	DESCRIPTION	601R					REMARKS
1	688–82586–50	EXTENSION, WIRE HARNESS (5M)	1					(7P)
2	688–8258A–50	EXTENSION, WIRE HARNESS (5M)	1					UR (10P)
	688–8258A–60	EXTENSION, WIRE HARNESS (6M)	1					UR (10P)
	688–8258A–70	EXTENSION, WIRE HARNESS (7M)	1					UR (10P)
	6K1–8258A–40	EXTENSION, WIRE HARNESS (8M)	1					UR (10P)
	61B–8258A–01	EXTENSION, WIRE HARNESS (9.5M)	1					UR (10P)
3	703–8258A–00	EXTENSION, WIRE HARNESS (0.5M)	1					7P TO 10P ADAPTER
4	688–82586–11	EXTENSION, WIRE HARNESS (2.0M)	1					UR L:2M(7P)
	688–82586–31	EXTENSION, WIRE HARNESS (3.0M)	1					UR L:3M(7P)
5	688–8258A–10	EXTENSION, WIRE HARNESS (2M)	1					UR (10P)
	688–8258A–30	EXTENSION, WIRE HARNESS (3M)	1					UR (10P)

FIG. 45 WIRE HARNESS 2

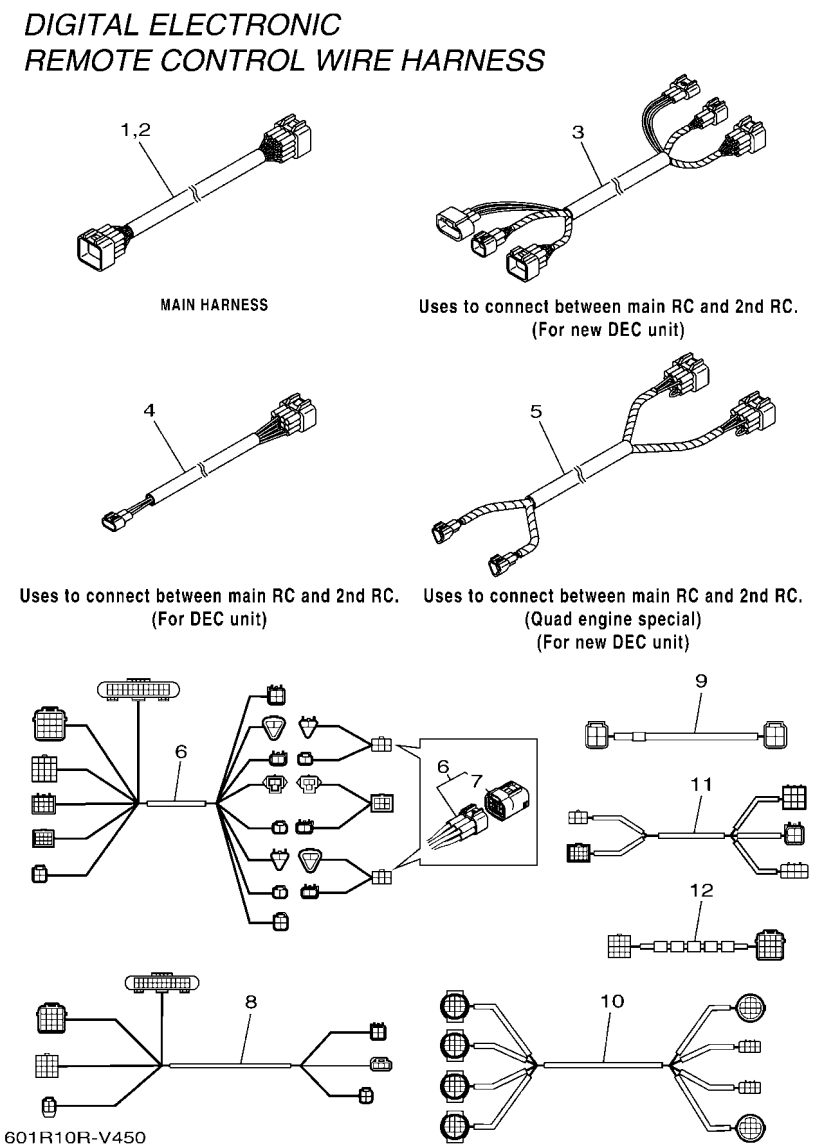

REF. NO.	PART NO.	DESCRIPTION	601R					REMARKS
1	6X6–8258A–01	EXTENSION, WIRE HARNESS (6.1M)	1					UR FOR SINGLE
	6X6–8258A–01	EXTENSION, WIRE HARNESS (6.1M)	2					UR FOR TWIN
	6X6–8258A–01	EXTENSION, WIRE HARNESS (6.1M)	3					UR FOR TRIPLE
	6X6–8258A–01	EXTENSION, WIRE HARNESS (6.1M)	4					UR FOR QUAD
	6X6–8258A–11	EXTENSION, WIRE HARNESS (7M)	1					UR FOR SINGLE
	6X6–8258A–11	EXTENSION, WIRE HARNESS (7M)	2					UR FOR TWIN
	6X6–8258A–11	EXTENSION, WIRE HARNESS (7M)	3					UR FOR TRIPLE
	6X6–8258A–11	EXTENSION, WIRE HARNESS (7M)	4					UR FOR QUAD
	6X6–8258A–21	EXTENSION, WIRE HARNESS (8M)	1					UR FOR SINGLE
	6X6–8258A–21	EXTENSION, WIRE HARNESS (8M)	2					UR FOR TWIN
	6X6–8258A–21	EXTENSION, WIRE HARNESS (8M)	3					UR FOR TRIPLE
	6X6–8258A–21	EXTENSION, WIRE HARNESS (8M)	4					UR FOR QUAD
	6X6–8258A–31	EXTENSION, WIRE HARNESS (10M)	1					UR FOR SINGLE
	6X6–8258A–31	EXTENSION, WIRE HARNESS (10M)	2					UR FOR TWIN
	6X6–8258A–31	EXTENSION, WIRE HARNESS (10M)	3					UR FOR TRIPLE
	6X6–8258A–31	EXTENSION, WIRE HARNESS (10M)	4					UR FOR QUAD
	6X6–8258A–41	EXTENSION, WIRE HARNESS (12M)	1					UR FOR SINGLE
	6X6–8258A–41	EXTENSION, WIRE HARNESS (12M)	2					UR FOR TWIN
	6X6–8258A–41	EXTENSION, WIRE HARNESS (12M)	3					UR FOR TRIPLE
	6X6–8258A–41	EXTENSION, WIRE HARNESS (12M)	4					UR FOR QUAD
2	6X6–8258A–51	EXTENSION, WIRE HARNESS (3.7M)	1					UR FOR SINGLE
	6X6–8258A–51	EXTENSION, WIRE HARNESS (3.7M)	2					UR FOR TWIN
	6X6–8258A–51	EXTENSION, WIRE HARNESS (3.7M)	3					UR FOR TRIPLE
	6X6–8258A–51	EXTENSION, WIRE HARNESS (3.7M)	4					UR FOR QUAD
	6X6–8258A–61	EXTENSION, WIRE HARNESS (5.2M)	1					UR FOR SINGLE
	6X6–8258A–61	EXTENSION, WIRE HARNESS (5.2M)	2					UR FOR TWIN
	6X6–8258A–61	EXTENSION, WIRE HARNESS (5.2M)	3					UR FOR TRIPLE

FIG. 45 WIRE HARNESS 2

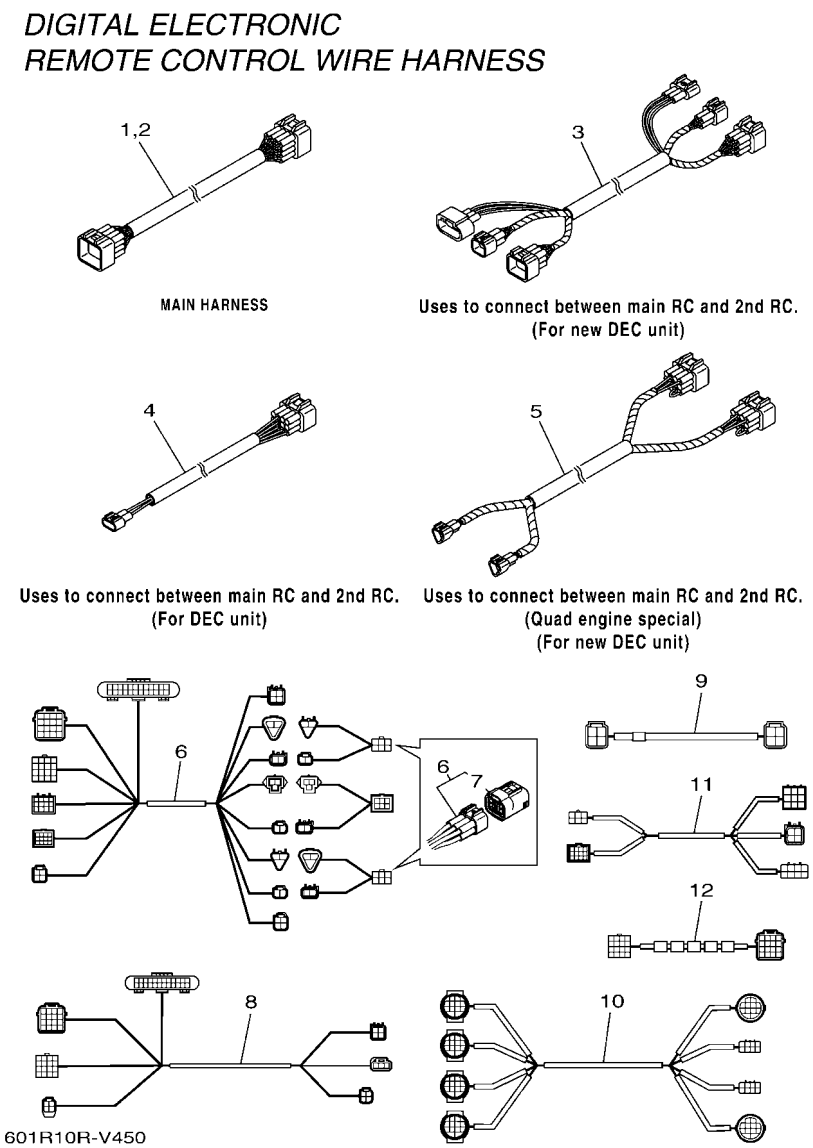

REF. NO.	PART NO.	DESCRIPTION	601R					REMARKS
2	6X6–8258A–61	EXTENSION, WIRE HARNESS (5.2M)	4					UR FOR QUAD
	6X6–8258A–71	EXTENSION, WIRE HARNESS (15M)	1					UR FOR SINGLE
	6X6–8258A–71	EXTENSION, WIRE HARNESS (15M)	2					UR FOR TWIN
	6X6–8258A–71	EXTENSION, WIRE HARNESS (15M)	3					UR FOR TRIPLE
	6X6–8258A–71	EXTENSION, WIRE HARNESS (15M)	4					UR FOR QUAD
	6X6–8258A–81	EXTENSION, WIRE HARNESS (24M)	1					UR FOR SINGLE
	6X6–8258A–81	EXTENSION, WIRE HARNESS (24M)	2					UR FOR TWIN
	6X6–8258A–81	EXTENSION, WIRE HARNESS (24M)	3					UR FOR TRIPLE
	6X6–8258A–81	EXTENSION, WIRE HARNESS (24M)	4					UR FOR QUAD
3	6X6–8258A–G1	EXTENSION, WIRE HARNESS (5M)	1					UR FOR SINGLE
	6X6–8258A–G1	EXTENSION, WIRE HARNESS (5M)	2					UR FOR TWIN
	6X6–8258A–G1	EXTENSION, WIRE HARNESS (5M)	3					UR FOR TRIPLE
	6X6–8258A–G1	EXTENSION, WIRE HARNESS (5M)	4					UR FOR QUAD
	6X6–8258A–H1	EXTENSION, WIRE HARNESS (8M)	1					UR FOR SINGLE
	6X6–8258A–H1	EXTENSION, WIRE HARNESS (8M)	2					UR FOR TWIN
	6X6–8258A–H1	EXTENSION, WIRE HARNESS (8M)	3					UR FOR TRIPLE
	6X6–8258A–H1	EXTENSION, WIRE HARNESS (8M)	4					UR FOR QUAD
	6X6–8258A–J1	EXTENSION, WIRE HARNESS: 12.2M	1					UR FOR SINGLE
	6X6–8258A–J1	EXTENSION, WIRE HARNESS: 12.2M	2					UR FOR TWIN
	6X6–8258A–J1	EXTENSION, WIRE HARNESS: 12.2M	3					UR FOR TRIPLE
	6X6–8258A–J1	EXTENSION, WIRE HARNESS: 12.2M	4					UR FOR QUAD
4	6X6–8258A–B1	EXTENSION, WIRE HARNESS (5M)	1					UR FOR SINGLE
	6X6–8258A–B1	EXTENSION, WIRE HARNESS (5M)	2					UR FOR TWIN,QUAD
	6X6–8258A–B1	EXTENSION, WIRE HARNESS (5M)	3					UR FOR TRIPLE
	6X6–8258A–D1	EXTENSION, WIRE HARNESS (8M)	1					UR FOR SINGLE
	6X6–8258A–D1	EXTENSION, WIRE HARNESS (8M)	2					UR FOR TWIN,QUAD
	6X6–8258A–D1	EXTENSION, WIRE HARNESS (8M)	3					UR FOR TRIPLE

FIG. 45 WIRE HARNESS 2

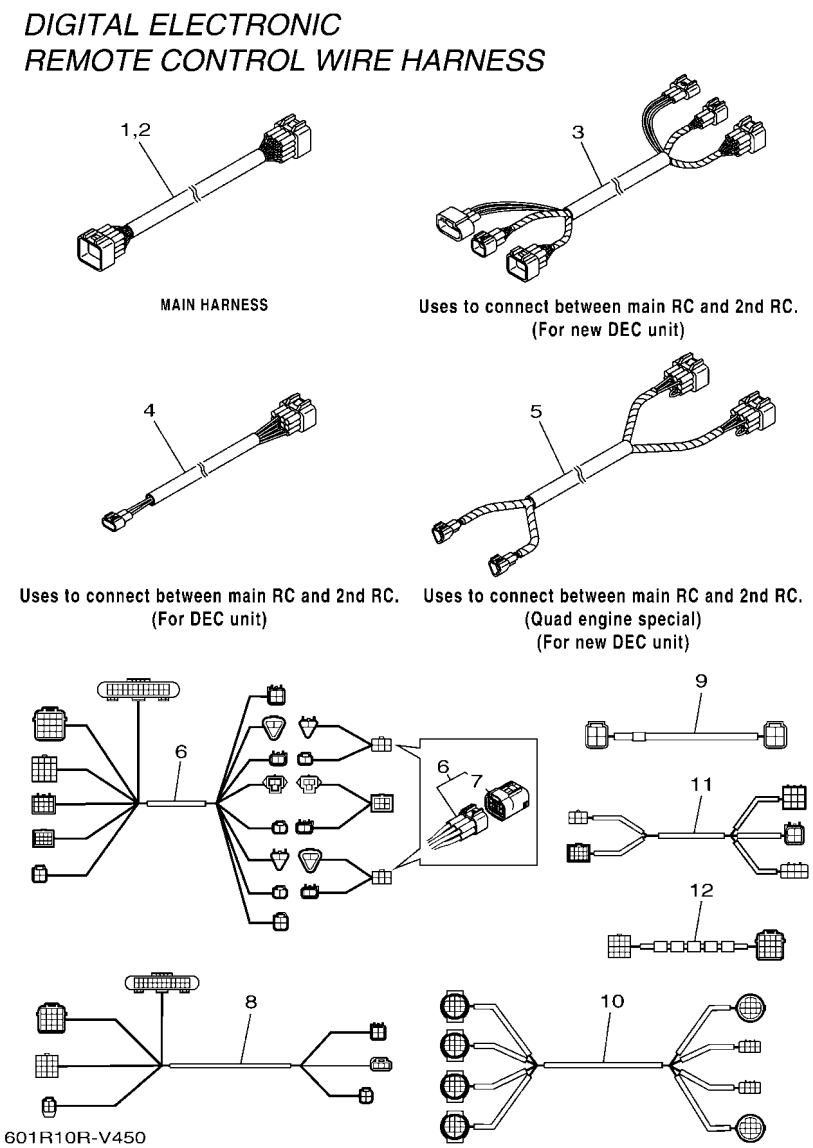

REF. NO.	PART NO.	DESCRIPTION	601R					REMARKS
4	6X6–8258A–F1	EXTENSION, WIRE HARNESS: 12.2M	1					UR FOR SINGLE
	6X6–8258A–F1	EXTENSION, WIRE HARNESS: 12.2M	2					UR FOR TWIN,QUAD
	6X6–8258A–F1	EXTENSION, WIRE HARNESS: 12.2M	3					UR FOR TRIPLE
5	6X6–8258A–R0	EXTENSION, WIRE HARNESS (5M)	2					UR FOR QUAD
	6X6–8258A–S0	EXTENSION, WIRE HARNESS (8M)	2					UR FOR QUAD
	6X6–8258A–T0	EXTENSION, WIRE HARNESS: 12.2M	2					UR FOR QUAD
6	6X9–8258A–00	2ND ST HARNESS (P) 5M-16FT	1					UR
	6X9–8258A–10	2ND ST HARNESS (P) 8M-26FT	1					UR
	6X9–8258A–20	2ND ST HARNESS (P) 12M-38FT	1					UR
7	6Y8–85371–01	.END OF LINE RESISTOR	2					
8	6X9–8258A–30	2ND ST HARNESS (S) 5M-16FT	1					UR EXCEPT SINGLE ENGINE
	6X9–8258A–40	2ND ST HARNESS (S) 8M-26FT	1					UR EXCEPT SINGLE ENGINE
	6X9–8258A–50	2ND ST HARNESS (S) 12M-38FT	1					UR EXCEPT SINGLE ENGINE
9	6X9–8258A–60	2ND ST HARNESS (C) 5M-16FT	1					UR FOR TRIPLE,QUAD ENGINE
	6X9–8258A–70	2ND ST HARNESS (C) 8M-26FT	1					UR FOR TRIPLE,QUAD ENGINE
	6X9–8258A–80	2ND ST HARNESS (C) 12M-38FT	1					UR FOR TRIPLE,QUAD ENGINE
10	6X9–83553–60	CONVERSION HARNESS	1					FOR TRIPLE,QUAD ENGINE
11	6X9–83553–40	CONVERSION HARNESS	1					FOR TRIPLE,QUAD ENGINE
12	6GR–8258A–V0	EXTENSION, WIRE HARNESS	1					

CONVERSION HARNESS

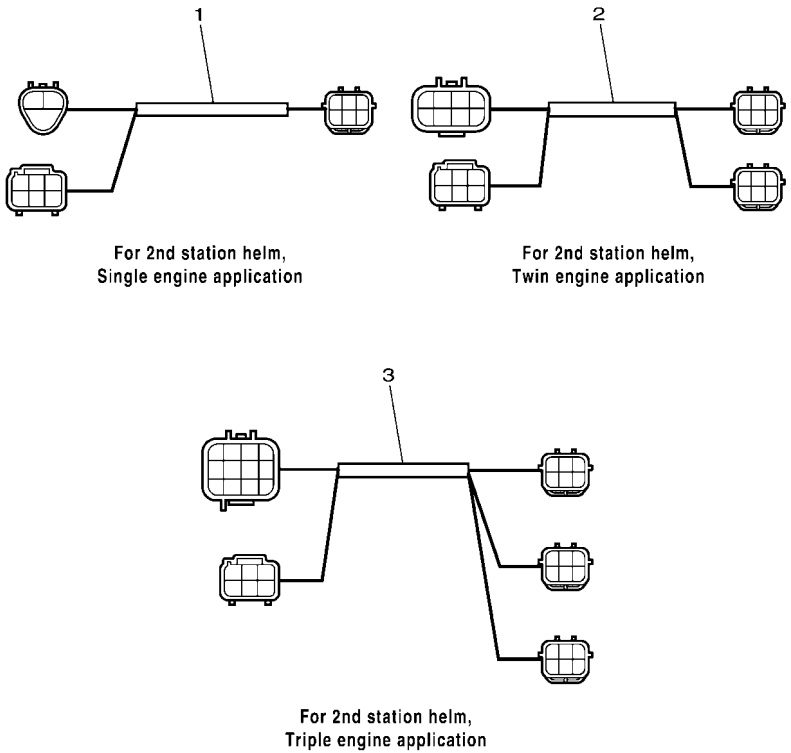

601R10R-V460

FIG. 46 WIRE HARNESS 3

REF. NO.	PART NO.	DESCRIPTION	601R					REMARKS
1	6X6–8258A–M0	EXTENSION, WIRE HARNESS	1					SINGLE SUB
2	6X6–8258A–N0	EXTENSION, WIRE HARNESS	1					TWIN SUB
3	6X6–8258A–P0	EXTENSION, WIRE HARNESS	1					TRIPLE SUB

Part No.	Applicable model	Remarks
655-48501-03	E8D/EK8D	Rope type
655-48501-11	E8D/EK8D	Ball post type

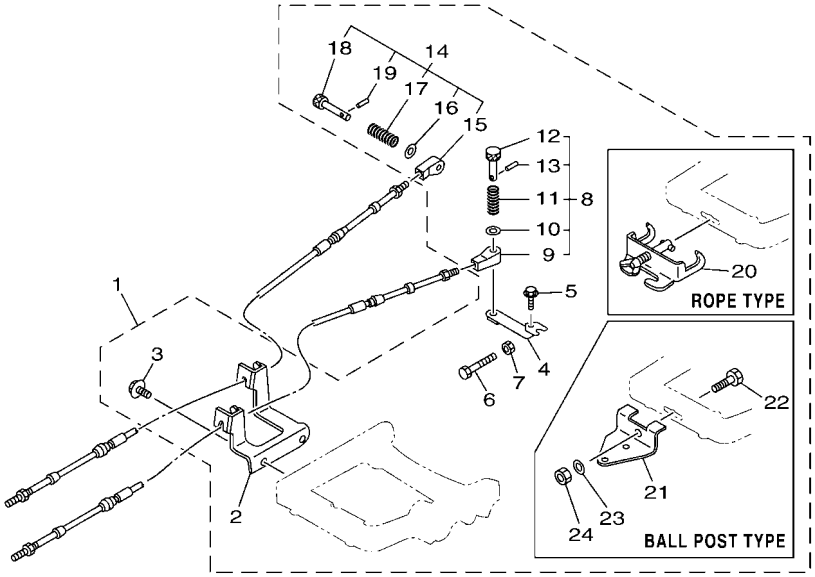

601R10R-T480

FIG. 47 REMO CON ATTACHMENT 1

REF. NO.	PART NO.	DESCRIPTION	601R					REMARKS
1	655–48501–03	REMOTE CONT. ATTACHMENT ASSY.	1					UR ROPE TYPE
	655–48501–11	REMOTE CONT. ATTACHMENT ASSY.	1					UR BALL POST TYPE
2	655–48531–51	.BRACKET, REMOTE CONTROL 1	1					
3	97E95–06518	.BOLT, HEXAGON W/W DEEP RECESS	2					
4	647–48534–50	.THROTTLE LEVER, CONTROL	1					
5	97595–05520	.BOLT, WITH WASHER	1					
6	97D95–06045	.BOLT, HEXAGON DEEP RECESS	1					
7	95380–06600	.NUT, HEXAGON	1					
8	647–48330–50	.CABLE END ASSY	1					
9	617–48346–90	..CABLE END, REMOTE CONTROL	1					
10	92990–08600	..WASHER, PLATE	1					
11	90501–10071	..SPRING, COMPRESSION	1					
12	617–48331–91	..HOOK, CABLE	1					
13	91690–30012	..PIN, SPRING	1					
14	647–48340–50	.CABLE END ASSY	1					
15	647–48346–50	..CABLE END, REMOTE CONTROL	1					
16	92990–08600	..WASHER, PLATE	1					
17	90501–10264	..SPRING, COMPRESSION	1					
18	617–48361–91	..HOOK, CABLE	1					
19	91690–30012	..PIN, SPRING	1					
20	700–48510–12	.STEERING HOOK ASSY	1					UR ROPE TYPE
21	676–48511–10	.HOOK, STEERING	1					UR BALL POST TYPE
22	97D75–10040	.BOLT, HEXAGON DEEP RECESS	1					
23	92990–10600	.WASHER, PLATE	1					
24	90185–10027	.NUT, SELF-LOCKING	1					

Part No.	Applicable model
63V-48501-00	9.9F, 9.9G, 15F

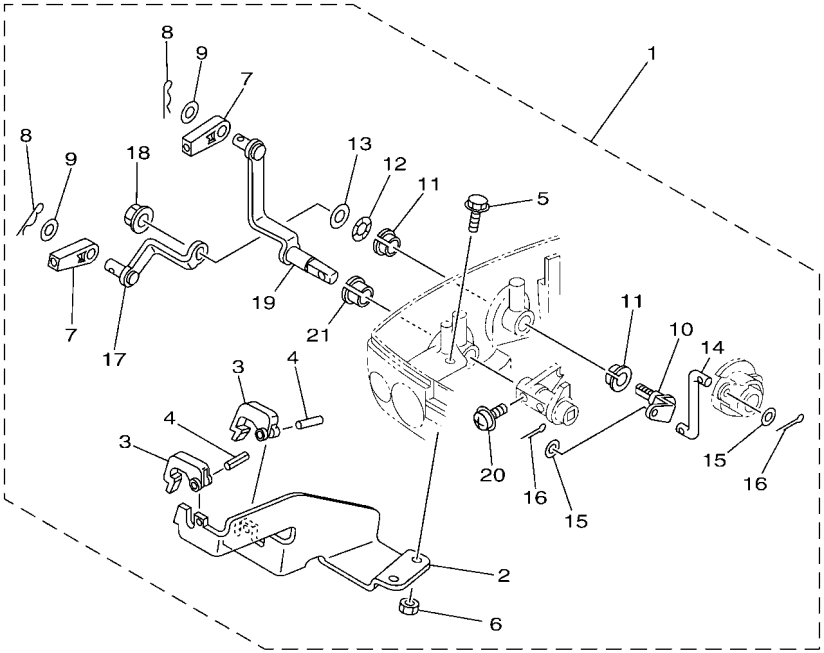

601R10R-S490

FIG. 48 REMO CON ATTACHMENT 2

REF. NO.	PART NO.	DESCRIPTION	601R					REMARKS
1	63V–48501–00	REMOTE CONT. ATTACHMENT ASSY.	1					
2	63V–48531–00	.BRACKET, REMOTE CONTROL 1	1					
3	682–48538–50	.CLAMP, CABLE 1	2					
4	91690–30012	.PIN, SPRING	2					
5	97595–06516	.BOLT, WITH WASHER	2					
6	95380–06600	.NUT, HEXAGON	2					
7	6FM–48344–00	.CABLE END, REMOTE CONTROL	2					
8	90468–18008	.CLIP	2					
9	90201–08M12	.WASHER, PLATE	2					
10	63V–42154–00	.LEVER, THROTTLE CONTROL	1					
11	90386–10025	.BUSH	2					
12	90206–10M04	.WASHER, WAVE	1					
13	90201–10M02	.WASHER, PLATE	1					
14	63V–42192–00	.ROD 2	1					
15	90201–04M06	.WASHER, PLATE	2					
16	91490–20010	.PIN. COTTER	2					
17	63V–48534–00	.THROTTLE LEVER, CONTROL	1					
18	95780–08300	.NUT, FLANGE	1					
19	63V–48544–00	.LEVER, SHIFTCONTROL	1					
20	90159–05M25	.SCREW, WITH WASHER	1					
21	90386–10009	.BUSH	1					

Part No.	Applicable model	Remarks
69R-48501-12	25B, 25X, 30H E25B, E30H	Rope type
69R-48501-02		Ball post/ Steering guide type

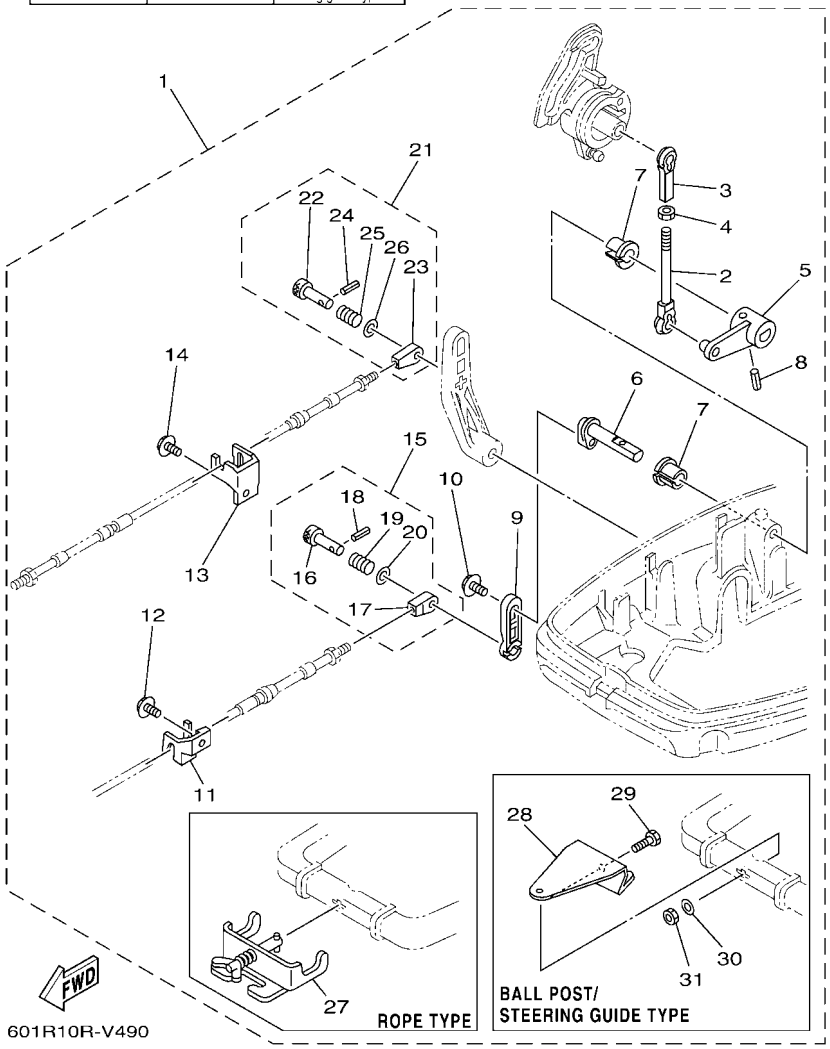

FIG. 49 REMO CON ATTACHMENT 3

REF. NO.	PART NO.	DESCRIPTION	601R					REMARKS
1	69R–48501–12	REMOTE CONT. ATTACHMENT ASSY.	1					UR ROPE TYPE
	69R–48501–02	REMOTE CONT. ATTACHMENT ASSY.	1					UR
2	682–41238–01	.JOINT, LINK	1					
3	682–41237–00	.JOINT, LINK	1					
4	95380–05600	.NUT	1					
5	69S–42157–10	.LEVER, THROTTLE	1					
6	656–42153–10–8D	.SHAFT, THROTTLE CONTROL	1					
7	90386–10009	.BUSH	2					
8	91690–40018	.PIN, SPRING	1					
9	648–48534–50–8D	.THROTTLE LEVER, CONTROL	1					
10	97595–06512	.BOLT, WITH WASHER	1					
11	689–48532–51	.BRACKET, REMOTE CONTROL 2	1					
12	97E95–06516	.BOLT, HEXAGON W/W DEEP RECESS	1					
13	689–48531–51	.BRACKET, REMOTE CONTROL 1	1					
14	97E95–06516	.BOLT, HEXAGON W/W DEEP RECESS	1					
15	648–48340–50	.CABLE END ASSY	1					
16	617–48361–91	..HOOK, CABLE	1					
17	617–48346–90	..CABLE END, REMOTE CONTROL	1					
18	91690–30012	..PIN, SPRING	1					
19	90501–10264	..SPRING, COMPRESSION	1					
20	92990–08600	..WASHER, PLATE	1					
21	648–48330–50	.CABLE END ASSY	1					
22	617–48331–91	..HOOK, CABLE	1					
23	648–48346–50	..CABLE END, REMOTE CONTROL	1					
24	91690–30012	..PIN, SPRING	1					
25	90501–10071	..SPRING, COMPRESSION	1					
26	92990–08600	..WASHER, PLATE	1					

Part No.	Applicable model	Remarks
69R-48501-12	25B, 25X, 30H E25B, E30H	Rope type
69R-48501-02		Ball post/ Steering guide type

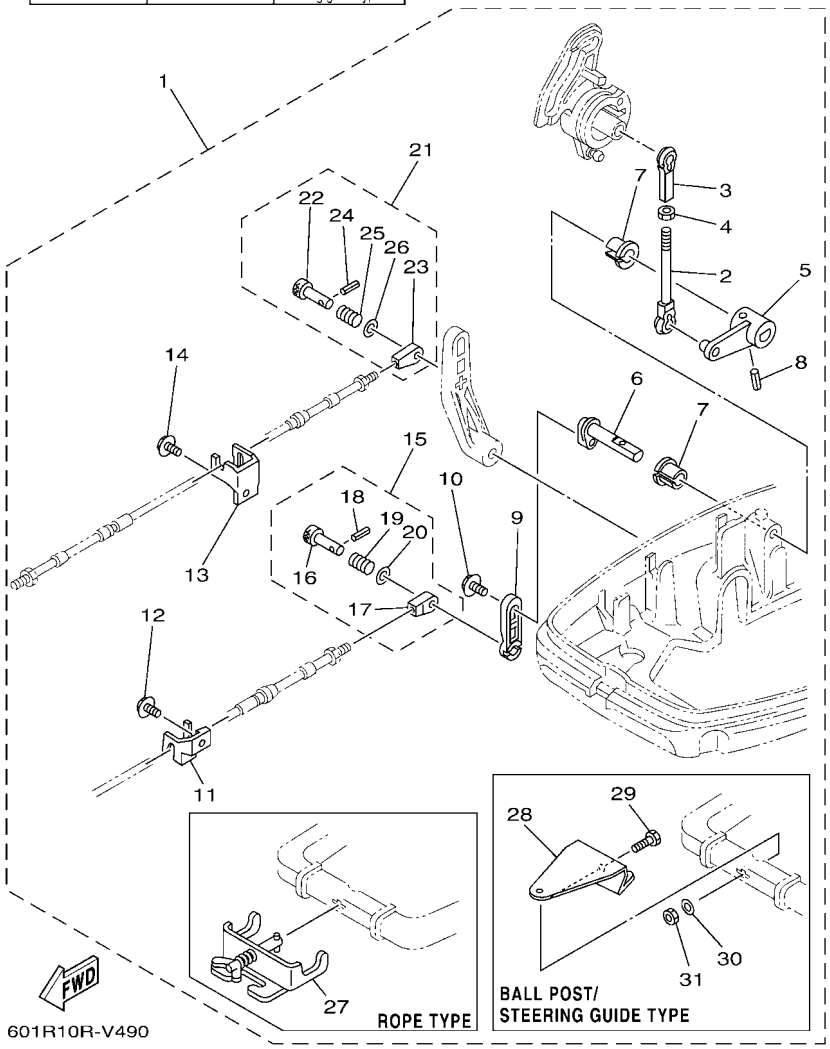

FIG. 49 REMO CON ATTACHMENT 3

REF. NO.	PART NO.	DESCRIPTION	601R					REMARKS
27	700–48510–12	.STEERING HOOK ASSY	1					ROPE TYPE
28	689–48511–02	.HOOK, STEERING	1					
29	97D75–10040	.BOLT, HEXAGON DEEP RECESS	1					
30	92995–10600	.WASHER	1					
31	90185–10027	.NUT, SELF-LOCKING	1					

Part No.	Applicable model
66T-48501-02	40X, E40X

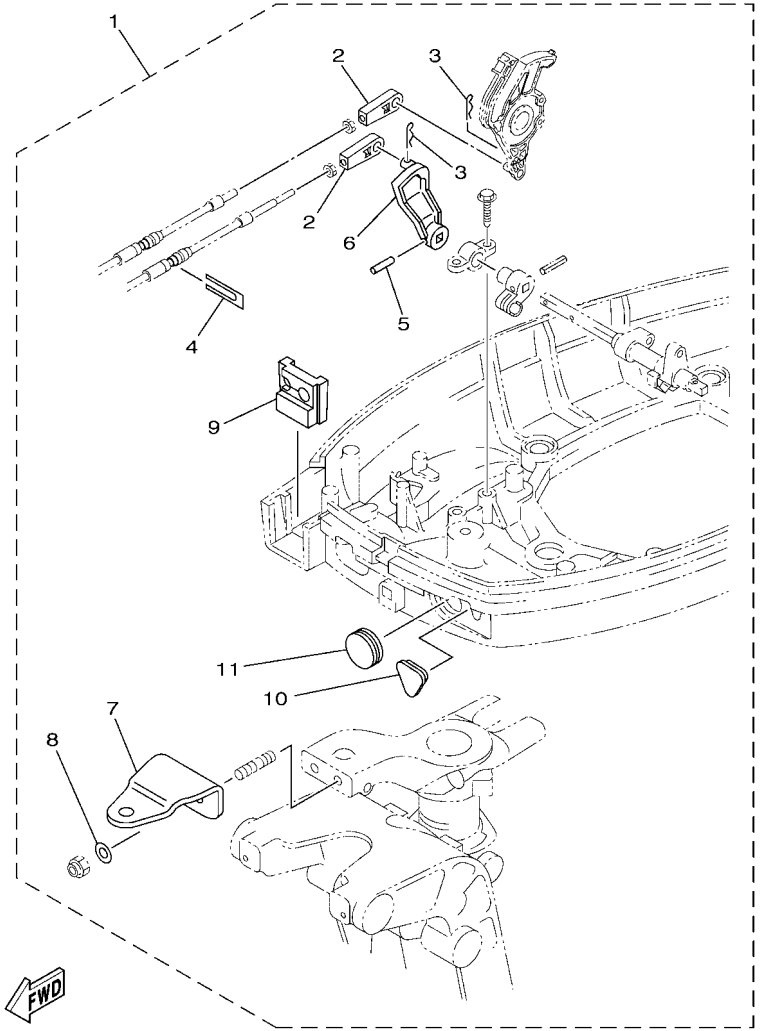

601R10R-V500

FIG. 50 REMO CON ATTACHMENT 4

REF. NO.	PART NO.	DESCRIPTION	601R					REMARKS
1	66T–48501–02	REMOTE CONT. ATTACHMENT ASSY.	1					
2	6FM–48344–00	.CABLE END, REMOTE CONTROL	2					
3	90468–18008	.CLIP	2					
4	6H3–48538–00	.CLAMP, CABLE 1	1					
5	90254–03M05	.PIN, SPRING	1					
6	66T–44125–01	.LEVER, SHIFT ROD	1					
7	65W–48511–01	.HOOK, STEERING	1					
8	90201–10120	.WASHER, PLATE	2					
9	66T–42725–31	.GROMMET	1					
10	65W–26326–11	.GROMMET	1					
11	65W–42726–11	.GROMMET	1					

Part No.	Applicable model
6DR-48501-03	F8F(F8B), FT8G, F9.9J(F9.9B), FT9.9L(T9.9B)

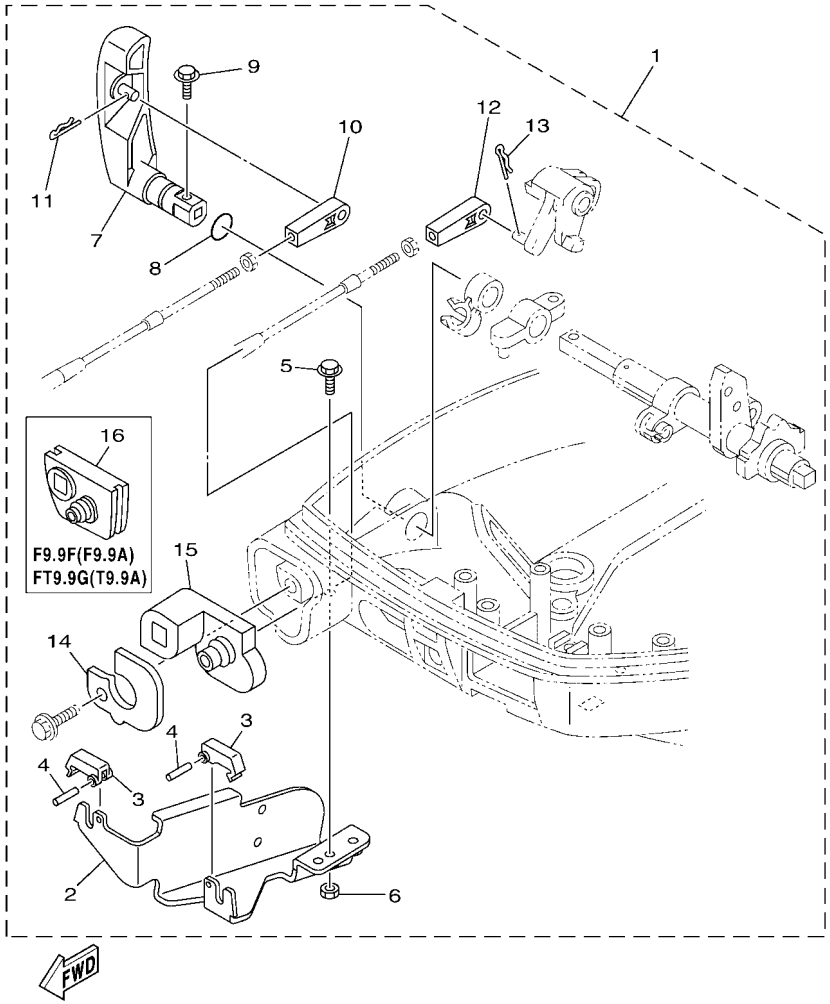

601R10R-V510

FIG. 51 REMO CON ATTACHMENT 5

REF. NO.	PART NO.	DESCRIPTION	601R					REMARKS
1	6DR–48501–03	REMOTE CONT. ATTACHMENT ASSY.	1					
2	68T–48531–01	.BRACKET, REMOTE CONTROL 1	1					
3	682–48538–50	.CLAMP, CABLE 1	2					
4	91690–30012	.PIN, SPRING	2					
5	97E95–06512	.BOLT, HEXAGON W/W DEEP RECESS	2					
6	95380–06600	.NUT, HEXAGON	2					
7	6AU–44111–10	.HANDLE, GEAR SHIFT	1					
8	93210–12327	.O-RING	1					
9	97595–05516	.BOLT, WITH WASHER	1					
10	6FM–48344–00	.CABLE END, REMOTE CONTROL	1					
11	90468–18008	.CLIP	1					
12	6FM–48344–00	.CABLE END, REMOTE CONTROL	1					
13	90468–18008	.CLIP	1					
14	6DR–42761–10	.STOPPER	1					
15	6DR–42725–11	.GROMMET	1					
16	68T–42725–11	.GROMMET	1					

Part No.	Applicable model
6AH-48501-02	F15C, F20B

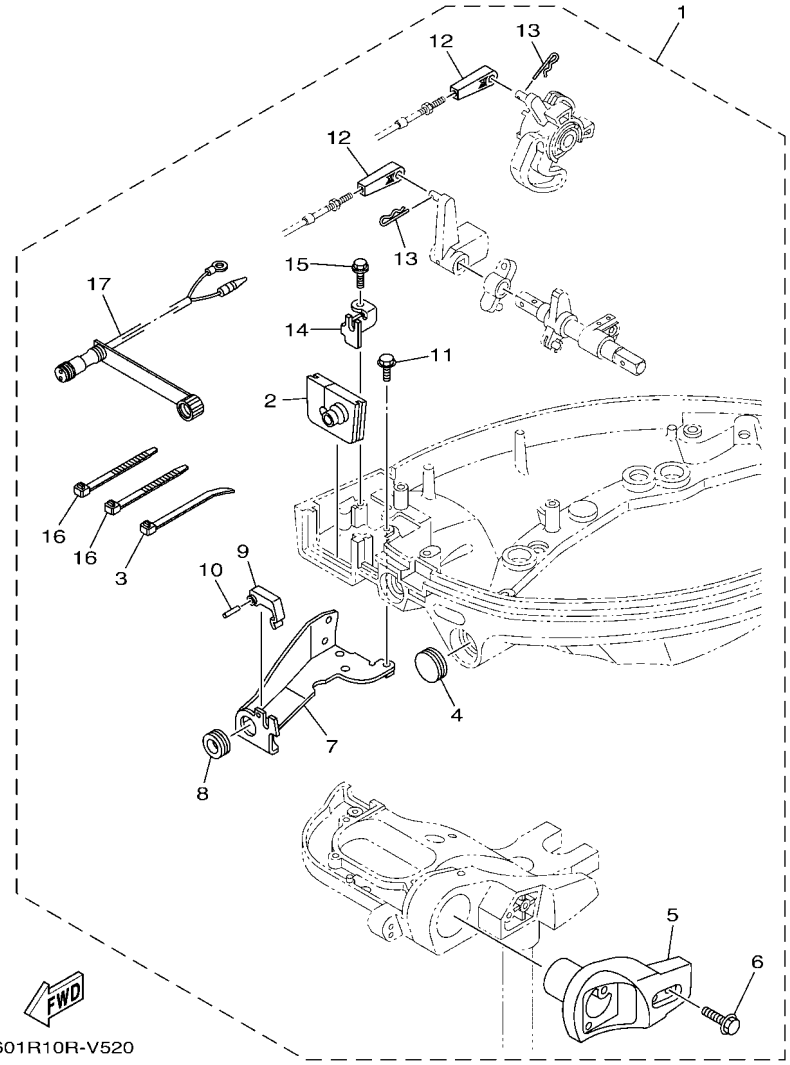

601R10R-V520

FIG. 52 REMO CON ATTACHMENT 6

REF. NO.	PART NO.	DESCRIPTION	601R					REMARKS
1	6AH–48501–02	REMOTE CONT. ATTACHMENT ASSY.	1					
2	6AH–42724–11	.GROMMET	1					
3	90465–11M10	.CLAMP	1					
4	65W–42726–11	.GROMMET	1					
5	6AH–83773–00	.BRACKET, SWITCH	1					
6	97E95–06530	.BOLT, HEXAGON W/W DEEP RECESS	2					
7	6AH–48532–00	.BRACKET, REMOTE CONTROL 2	1					
8	90480–19031	.GROMMET	1					
9	682–48538–50	.CLAMP, CABLE 1	1					
10	91690–30012	.PIN, SPRING	1					
11	97E95–06514	.BOLT, HEXAGON W/W DEEP RECESS	2					
12	6FM–48344–00	.CABLE END, REMOTE CONTROL	2					
13	90468–18008	.CLIP	2					
14	6AH–48531–00	.BRACKET, REMOTE CONTROL 1	1					
15	90109–06M86	.BOLT	1					
16	90465–13M18	.CLAMP	2					
17	6D5–84340–01	.SOCKET CORD ASSY 1	1					

Part No.	Applicable model
6BL-48501-02	F25D

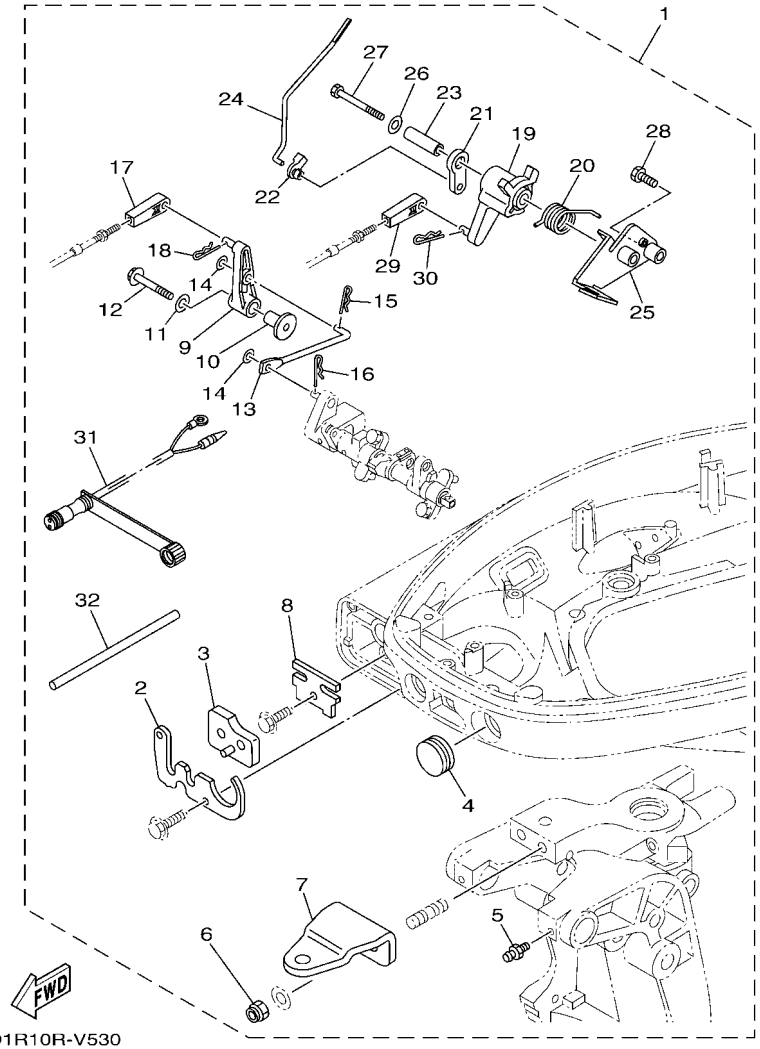

601R10R-V530

FIG. 53 REMO CON ATTACHMENT 7

REF. NO.	PART NO.	DESCRIPTION	601R					REMARKS
1	6BL–48501–02	REMOTE CONT. ATTACHMENT ASSY.	1					
2	6BL–42761–00	.STOPPER	1					
3	6BL–42727–01	.GROMMET	1					
4	65W–42726–11	.GROMMET	1					
5	93700–06M03	.NIPPLE, GREASE	2					
6	90185–10027	.NUT, SELF-LOCKING	2					
7	65W–48511–01	.HOOK, STEERING	1					
8	6BL–48538–00	.CLAMP, CABLE 1	1					
9	6BL–44125–00	.LEVER, SHIFT ROD	1					
10	90387–06M86	.COLLAR	1					
11	90201–06M31	.WASHER, PLATE	1					
12	97E95–06535	.BOLT, HEXAGON W/W DEEP RECESS	1					
13	6BL–44192–00	.LINK, SHIFT ROD	1					
14	90201–05M06	.WASHER, PLATE	2					
15	90468–10005	.CLIP	1					
16	90468–18001	.CLIP	1					
17	6FM–48344–00	.CABLE END, REMOTE CONTROL	1					
18	90468–18008	.CLIP	1					
19	6BL–41638–00	.PULLEY	1					
20	90508–20040	.SPRING, TORSION	1					
21	65W–41283–00	.LEVER, FREE ACCEL.	1					
22	6J8–41262–00	.JOINT, CHOKE LEVER	1					
23	90387–06139	.COLLAR	1					
24	6BL–41211–00	.LINK, ACCEL.	1					
25	6BL–14571–10	.BRACKET, THROTTLE	1					
26	90201–06M31	.WASHER, PLATE	1					
27	97D95–06065	.BOLT, HEXAGON DEEP RECESS	1					

Part No.	Applicable model
6BL-48501-02	F25D

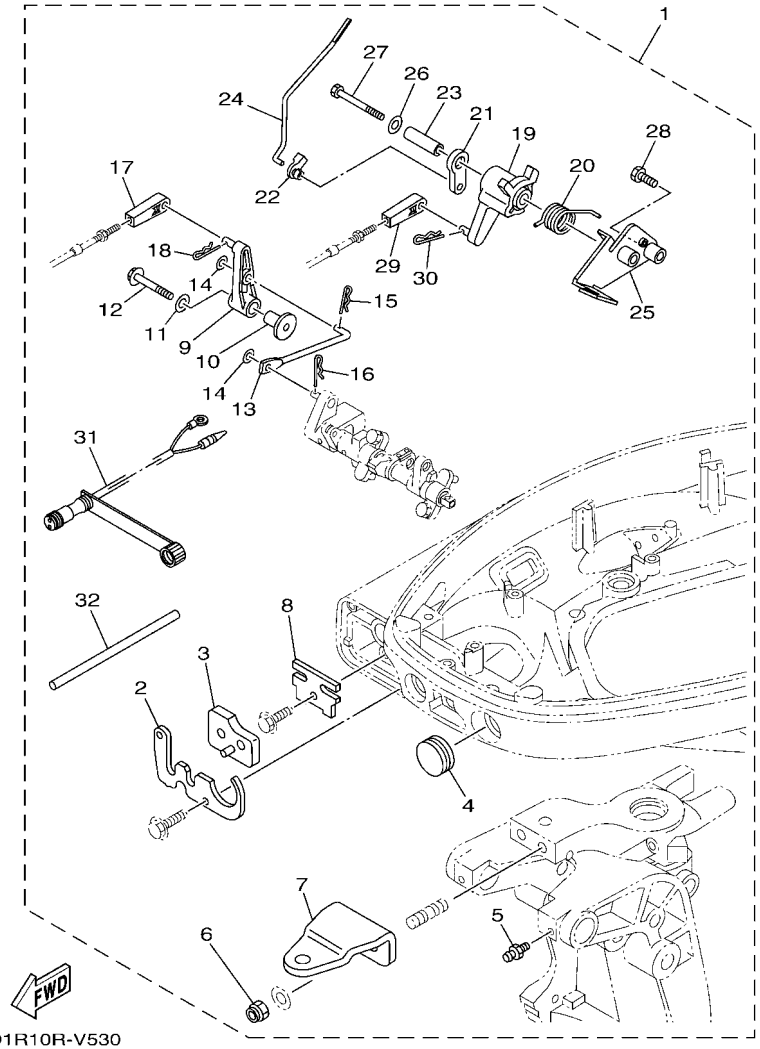

601R10R-V530

FIG. 53 REMO CON ATTACHMENT 7

REF. NO.	PART NO.	DESCRIPTION	601R					REMARKS
28	97D95–06025	.BOLT, HEXAGON DEEP RECESS	1					
29	6FM–48344–00	.CABLE END, REMOTE CONTROL	1					
30	90468–18008	.CLIP	1					
31	6D5–84340–01	.SOCKET CORD ASSY 1	1					
32	90446–09M42	.HOSE (L160)	2					

Part No.	Applicable model
6FM-48501-02	F20G(F20B), F25G (F25C/T25C)

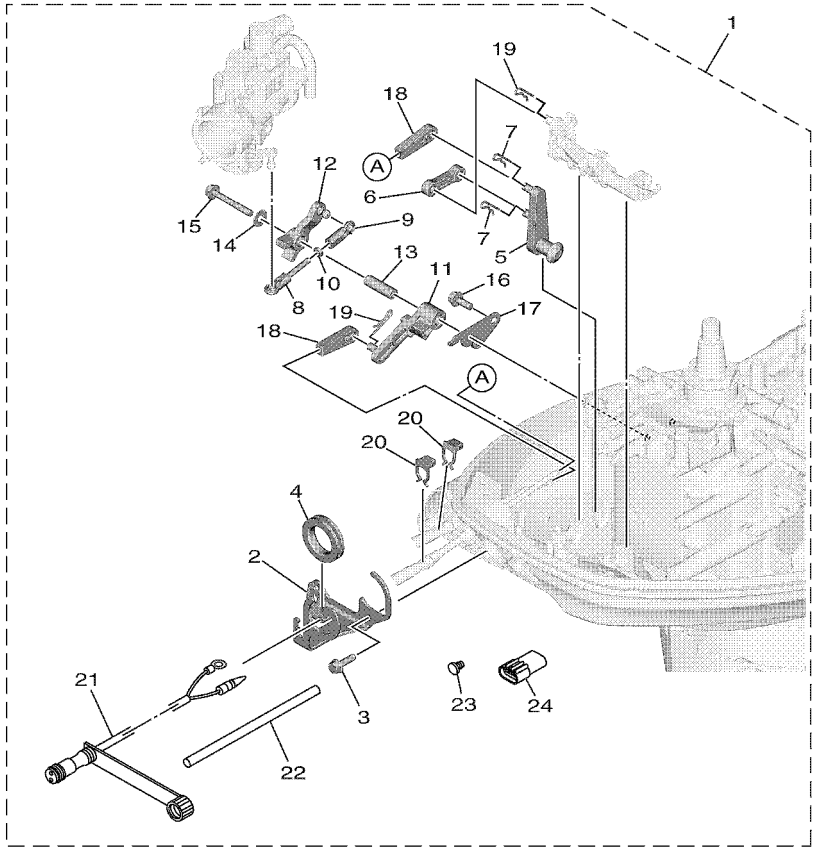

601R10RDV540

FIG. 54 REMO CON ATTACHMENT 8

REF. NO.	PART NO.	DESCRIPTION	601R					REMARKS
1	6FM–48501–02	REMOTE CONT. ATTACHMENT ASSY.	1					
2	6FM–42761–10	.STOPPER	1					
3	90109–06316	.BOLT	2					
4	6FM–42726–11	.GROMMET	1					
5	6FM–44125–00	.LEVER, SHIFT ROD	1					
6	6FM–44192–00	.LINK, SHIFT ROD	1					
7	90468–18008	.CLIP	2					
8	682–41237–50	.JOINT, LINK	1					
9	6H4–41237–00	.JOINT, LINK	1					
10	95380–05700	.NUT	1					
11	6FM–42157–00	.LEVER, THROTTLE	1					
12	6FM–41283–00	.LEVER, FREE ACCEL.	1					
13	90387–06M59	.COLLAR	1					
14	90201–06M62	.WASHER, PLATE	1					
15	95D95–06045	.BOLT, FLANGE DEEP RECESS	1					
16	95D95–06016	.BOLT, FLANGE DEEP RECESS	1					
17	6FM–14571–00	.BRACKET, THROTTLE	1					
18	6FM–48344–00	.CABLE END, REMOTE CONTROL	2					
19	90468–18008	.CLIP	2					
20	63D–48538–00	.CLAMP, CABLE 1	2					
21	6D5–84340–00	.SOCKET CORD ASSY 1	1					
22	90446–09M42	.HOSE (L160)	1					
23	703–82119–01	.COVER, LEAD WIRE	1					
24	6FM–82582–00	.CAP 1 (3P)	1					

STEERING HOOK

Part No.	Applicable model	Remarks
676-48511-02	E40J	Steering guide type

Part No.	Applicable model	Remarks
63D-48511-01	40V, 50H FT50C, F50D	Steering guide type

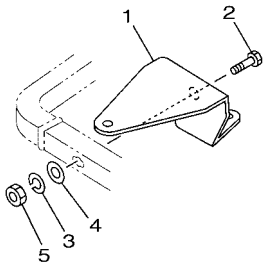

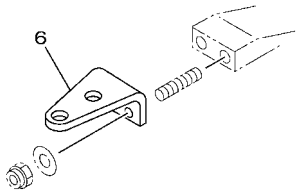

Part No.	Applicable model	Remarks
688-48511-12	E75B, 85A	Steering guide type

Part No.	Applicable model	Remarks
63V-48511-01	F8F (F8B), FT8G F9.9J (F9.9B) FT9.9L (T9.9B) 9.9F, 15F	Steering guide type

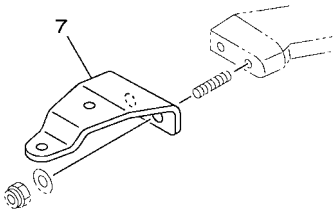

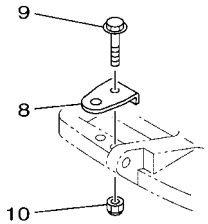

601R10R-T560

FIG. 55 STEERING HOOK 1

REF. NO.	PART NO.	DESCRIPTION	601R					REMARKS
1	676–48511–02	HOOK, STEERING	1					STEERING GUIDE
2	97D75–10040	BOLT, HEXAGON DEEP RECESS	1					
3	92990–10100	WASHER, SPRING	1					
4	92990–10600	WASHER, PLATE	1					
5	95380–10600	NUT	1					
6	63D–48511–01	HOOK, STEERING	1					STEERING GUIDE
7	688–48511–12	HOOK, STEERING	1					STEERING GUIDE
8	63V–48511–01	HOOK, STEERING	1					STEERING GUIDE
9	97E75–08535	BOLT, HEXAGON W/W DEEP RECESS	1					
10	90185–08057	NUT, SELF-LOCKING	1					

STEERING HOOK

Part No.	Applicable model	Remarks
6AH-48511-01	F9.9H, F15C(F15A) F20B (F20A) , F20C	Steering guide type

Part No.	Applicable model	Remarks
65W-48511-01	F20G(F20B) F25D F25G(F25C/T25C) FT25F F30B (F30A), F40F (F40A) (E) 40X, F40G F50H (F50B), FT50J (T50B) F60F (F60B), FT60G (T60B) F40H, F70A (F70A)	Steering guide type

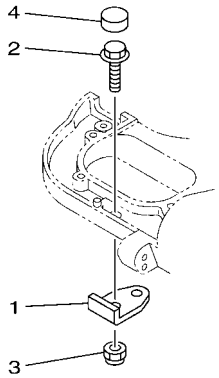

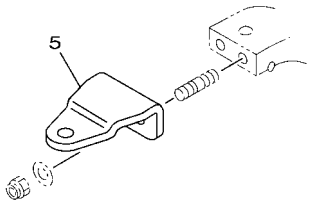

Part No.	Applicable model	Remarks
68V-48511-01	F100B	Steering guide type

Part No.	Applicable model	Remarks
688-48511-02	FL115B, FL130A	Steering guide type

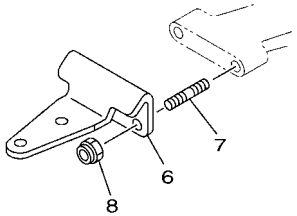

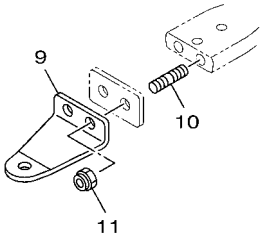

601R10R-U570

FIG. 56 STEERING HOOK 2

REF. NO.	PART NO.	DESCRIPTION	601R					REMARKS
1	6AH–48511–01	HOOK, STEERING	1					STEERING GUIDE
2	97E95–08525	BOLT, HEXAGON W/W DEEP RECESS	1					
3	90185–08057	NUT, SELF-LOCKING	1					
4	6AH–44194–00	CAP	1					
5	65W–48511–01	HOOK, STEERING	1					STEERING GUIDE
6	68V–48511–01	HOOK, STEERING	1					STEERING GUIDE
7	90116–10062	BOLT, STUD	2					
8	90185–10027	NUT, SELF-LOCKING	2					
9	688–48511–02	HOOK, STEERING	1					STEERING GUIDE
10	90116–10063	BOLT, STUD	2					
11	90185–10027	NUT, SELF-LOCKING	2					

STEERING HOOK

Part No.	Applicable model	Remarks
676-48511-10	E8D, EK8D	Ball post type

Part No.	Applicable model	Remarks
689-48511-02	25B, 25X, 30H E25B, E30H	Ball post type/ Steering guide type

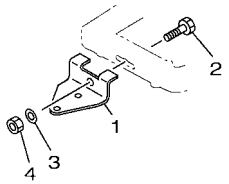

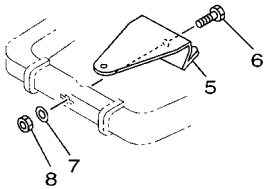

Part No.	Applicable model	Remarks
700-48510-12	E8D, EK8D 25B, 25X, 30H E25B, E30H	Rope type

Part No.	Applicable model	Remarks
69G-48511-10	FT9.9L (T9.9B)	For Linkage to main-engine

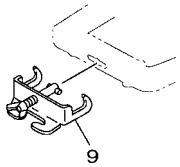

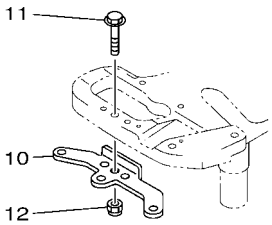

601R10R-R560

FIG. 57 STEERING HOOK 3

REF. NO.	PART NO.	DESCRIPTION	601R					REMARKS
1	676–48511–10	HOOK, STEERING	1					BALL POST TYPE
2	97D75–10040	BOLT, HEXAGON DEEP RECESS	1					
3	92990–10600	WASHER, PLATE	1					
4	90185–10027	NUT, SELF-LOCKING	1					
5	689–48511–02	HOOK, STEERING	1					
6	97D75–10040	BOLT, HEXAGON DEEP RECESS	1					
7	92990–10600	WASHER, PLATE	1					
8	90185–10027	NUT, SELF-LOCKING	1					
9	700–48510–12	STEERING HOOK ASSY	1					ROPE TYPE
10	69G–48511–10	HOOK, STEERING	1					
11	97E75–08535	BOLT, HEXAGON W/W DEEP RECESS	1					
12	90185–08057	NUT, SELF-LOCKING	1					

Part No.	Applicable model
68T-61350-10	F8F (F8B), FT8G F9.9J (F9.9B), FT9.9L (T9.9B)

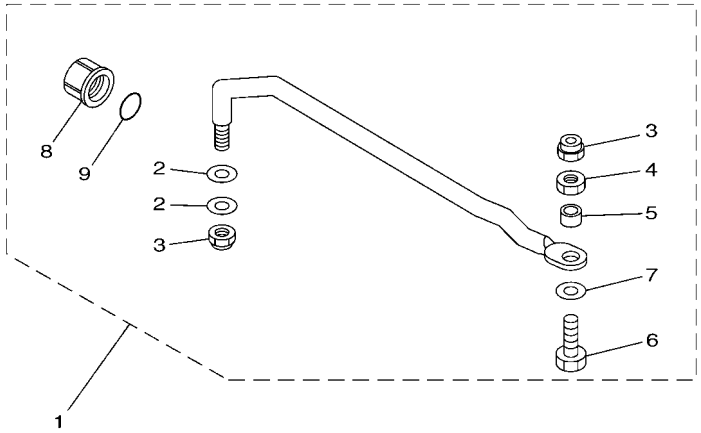

601R10R-P600

FIG. 58 STEERING GUIDE 1

REF. NO.	PART NO.	DESCRIPTION	601R					REMARKS
1	68T–61350–10	STEERING GUIDE ATTACHMENT KIT	1					
2	90201–10M20	.WASHER, PLATE	2					
3	90185–09M01	.NUT, SELF-LOCKING	2					
4	90170–09M03	.NUT	1					
5	90387–10M42	.COLLAR	1					
6	6E5–61355–00	.BOLT	1					
7	90201–10081	.WASHER, PLATE	1					
8	6E5–43145–01	.CAP, CLAMP BRACKET	1					
9	93210–16275	.O-RING	1					

Part No.	Applicable model
6AH-61350-00	F9.9H, F15C (F15A), F20B (F20A), F20C

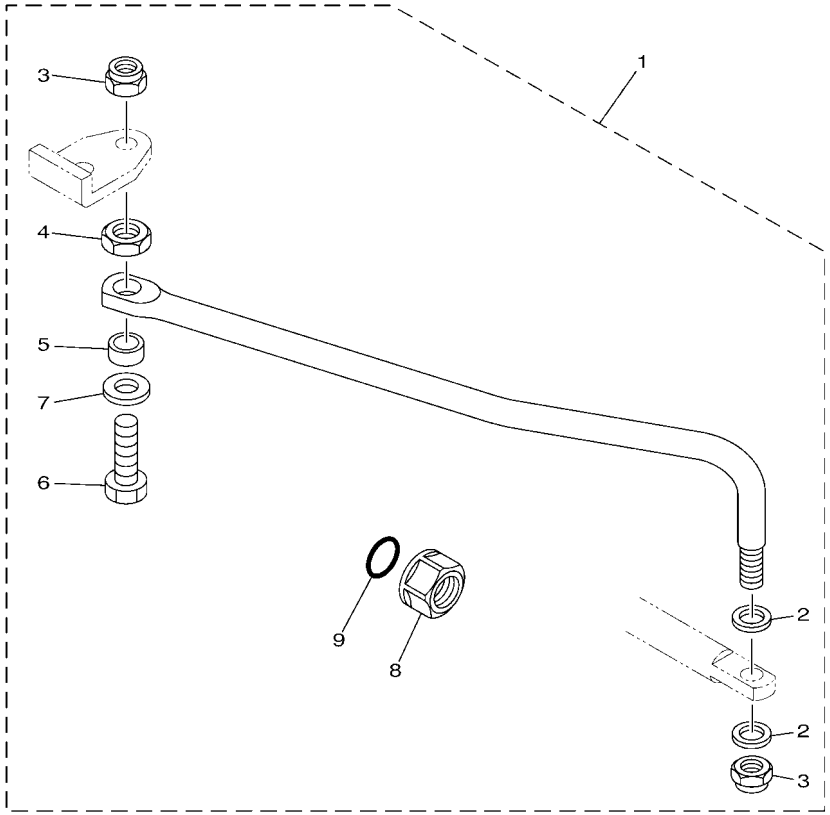

601R10R-N660

FIG. 59 STEERING GUIDE 2

REF. NO.	PART NO.	DESCRIPTION	601R					REMARKS
1	6AH–61350–00	STEERING GUIDE ATTACHMENT KIT	1					
2	90201–10M20	.WASHER, PLATE	2					
3	90185–09M01	.NUT, SELF-LOCKING	2					
4	90170–09M03	.NUT	1					
5	90387–10M42	.COLLAR	1					
6	6E5–61355–00	.BOLT	1					
7	90201–10081	.WASHER, PLATE	1					
8	6E5–43145–01	.CAP, CLAMP BRACKET	1					
9	93210–16275	.O-RING	1					

Part No.	Applicable model
689-61350-02	25B, 30H

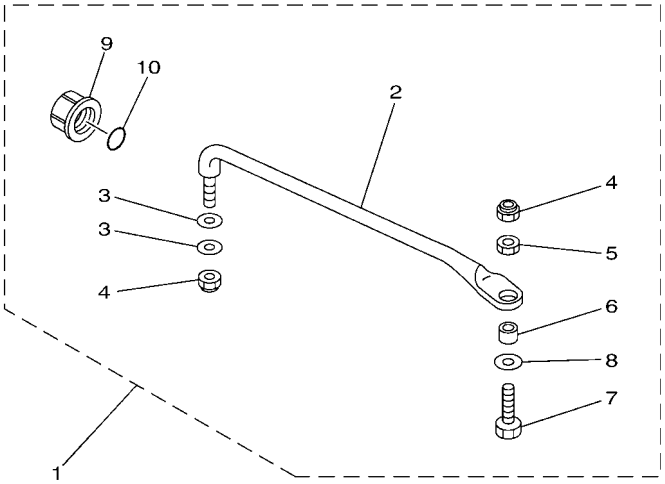

601R10R-R590

FIG. 60 STEERING GUIDE 3

REF. NO.	PART NO.	DESCRIPTION	601R					REMARKS
1	689–61350–02	STEERING GUIDE ATTACHMENT KIT	1					
2	689–61351–01	.ROD, STEERING LINK	1					
3	90201–10M20	.WASHER, PLATE	2					
4	90185–09M01	.NUT, SELF-LOCKING	2					
5	90170–09M03	.NUT	1					
6	90387–10M42	.COLLAR	1					
7	6E5–61355–00	.BOLT	1					
8	90201–10081	.WASHER, PLATE	1					
9	6E5–43145–01	.CAP, CLAMP BRACKET	1					
10	93210–16275	.O-RING	1					

Part No.	Applicable model
63D-61350-00	40V, 50H FT50C, F50D

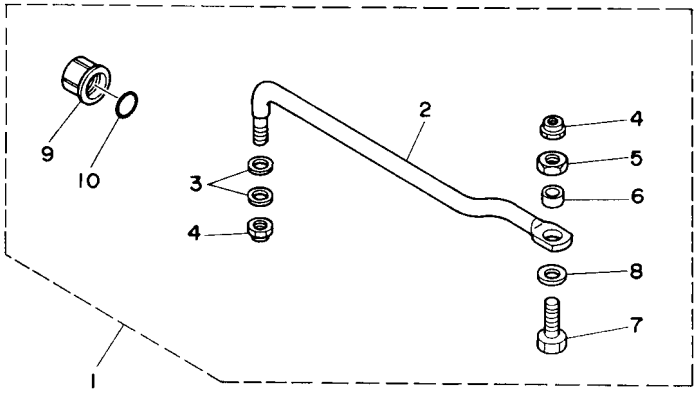

601R10R-M670

FIG. 61 STEERING GUIDE 4

REF. NO.	PART NO.	DESCRIPTION	601R					REMARKS
1	63D–61350–00	STEERING GUIDE ATTACHMENT KIT	1					
2	63D–61351–00	.ROD, STEERING LINK	1					
3	90201–10M20	.WASHER, PLATE	2					
4	90185–09M01	.NUT, SELF-LOCKING	2					
5	90170–09M03	.NUT	1					
6	90387–10M42	.COLLAR	1					
7	90101–09M01	.BOLT	1					
8	90201–10081	.WASHER, PLATE	1					
9	6E5–43145–01	.CAP, CLAMP BRACKET	1					
10	93210–16275	.O-RING	1					

Part No.	Applicable model
65W-61350-00	40X, E40X F50H (F50B), FT50J (T50B), F40H, F40G F60F (F60B), FT60G (T60B), F70A (F70A)

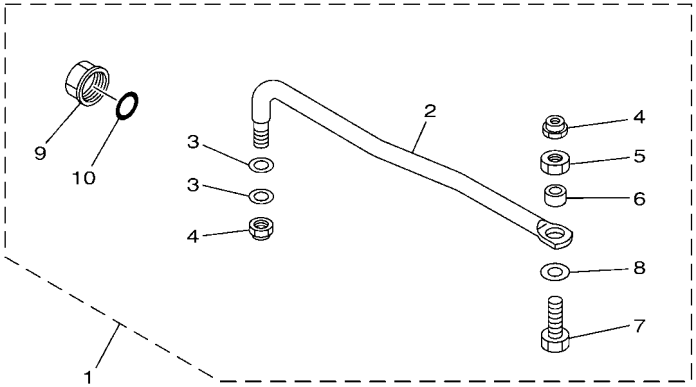

601R10R-T630

FIG. 62 STEERING GUIDE 5

REF. NO.	PART NO.	DESCRIPTION	601R					REMARKS
1	65W–61350–00	STEERING GUIDE ATTACHMENT KIT	1					
2	65W–61351–00	.ROD, STEERING LINK	1					
3	90201–10M20	.WASHER, PLATE	2					
4	90185–09M01	.NUT, SELF-LOCKING	2					
5	90170–09M03	.NUT	1					
6	90387–10M42	.COLLAR	1					
7	90101–09M01	.BOLT	1					
8	90201–10081	.WASHER, PLATE	1					
9	6E5–43145–01	.CAP, CLAMP BRACKET	1					
10	93210–16275	.O-RING	1					

Part No.	Applicable model
688-61350-10	60F, 70B, 85A, E60H

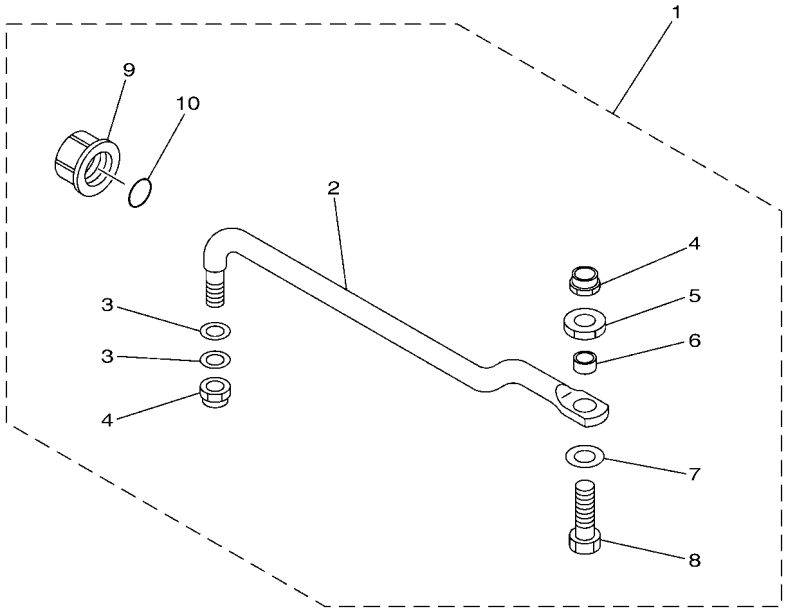

601R10R-T640

FIG. 63 STEERING GUIDE 6

REF. NO.	PART NO.	DESCRIPTION	601R					REMARKS
1	688–61350–10	STEERING GUIDE ATTACHMENT KIT	1					
2	688–61351–10	.ROD, STEERING LINK	1					
3	90201–10M20	.WASHER, PLATE	2					
4	90185–09M01	.NUT, SELF-LOCKING	2					
5	90170–09M03	.NUT	1					
6	90387–10M42	.COLLAR	1					
7	90201–10081	.WASHER, PLATE	1					
8	6E5–61355–00	.BOLT	1					
9	6E5–43145–01	.CAP, CLAMP BRACKET	1					
10	93210–16275	.O-RING	1					

Part No.	Applicable model
6E5-61350-02	F100B F150 – F300 (V6), 115 and larger

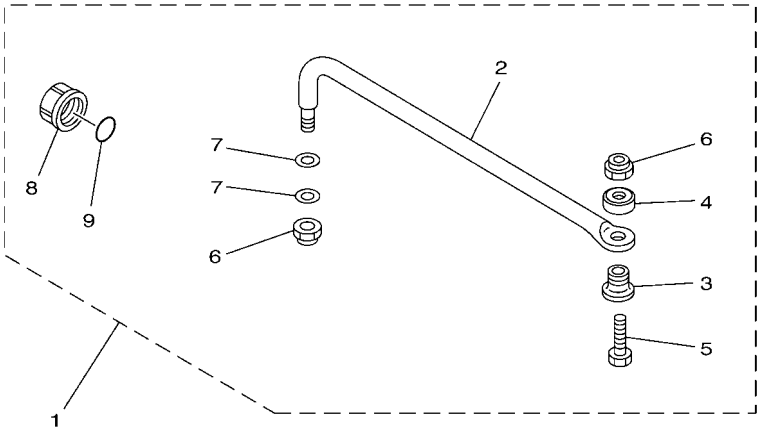

601R10R-U650

FIG. 64 STEERING GUIDE 7

REF. NO.	PART NO.	DESCRIPTION	601R					REMARKS
1	6E5–61350–02	STEERING GUIDE ATTACHMENT KIT	1					
2	6E5–61351–01	.ROD, STEERING LINK	1					
3	90387–10M61	.COLLAR	1					
4	90560–12M01	.SPACER	1					
5	6E5–61355–00	.BOLT	1					
6	90185–09M01	.NUT, SELF-LOCKING	2					
7	90201–10M20	.WASHER, PLATE	2					
8	6E5–43145–01	.CAP, CLAMP BRACKET	1					
9	93210–16275	.O-RING	1					

Part No.	Applicable model
6E5-61301-01	40 and larger, F30 – F300 (V6)

Twin engine tie-bar kit
Adjustable distance : 600 mm (23.6 in.) – 800 mm (31.5 in.)

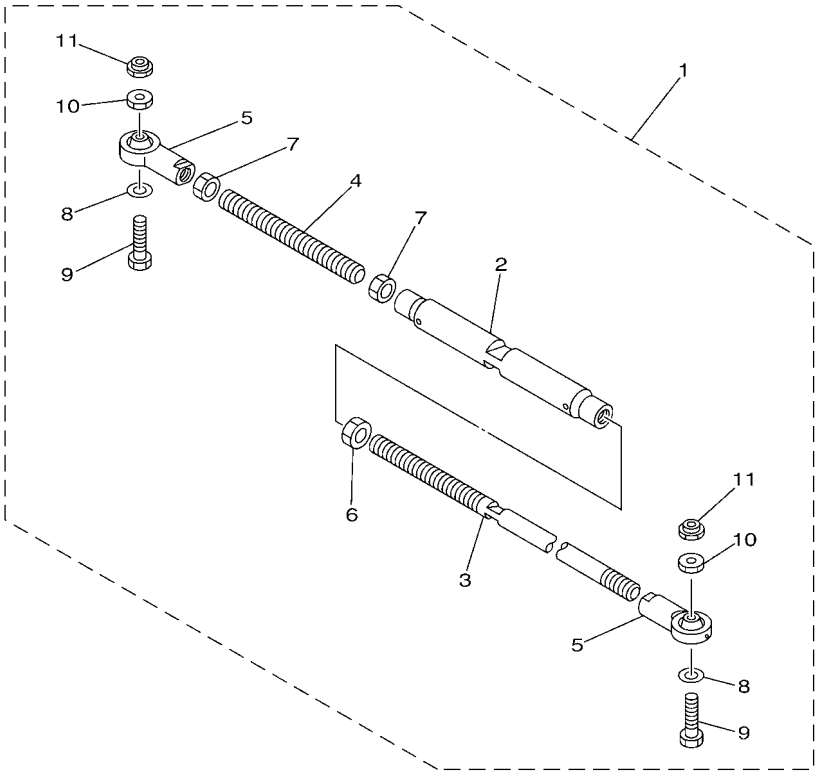

601R10R-P680

FIG. 65 STEERING GUIDE 8

REF. NO.	PART NO.	DESCRIPTION	601R					REMARKS
1	6E5–61301–01	TWIN KIT (L:600-800MM)	1					
2	6E5–61313–00	.ADJUSTER	1					
3	6E5–61311–11	.TIE BAR	1					
4	6E5–61315–00	.TIE BAR	1					
5	6E5–61303–00	.STEERING AXLE COMP.	2					
6	90170–14M06	.NUT	1					
7	95380–14700	.NUT	2					
8	90201–10M76	.WASHER, PLATE	2					
9	90101–09M70	.BOLT	2					
10	90170–09M05	.NUT	2					
11	90185–09M01	.NUT, SELF-LOCKING	2					

Part No.	Applicable model
6BG-61350-00	F25D, FT25F F30B (F30A), F40F (F40A)

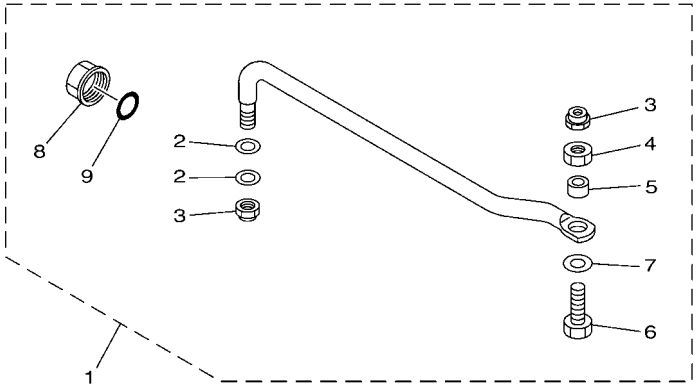

601R10R-U670

FIG. 66 STEERING GUIDE 9

REF. NO.	PART NO.	DESCRIPTION	601R					REMARKS
1	6BG–61350–00	STEERING GUIDE ATTACHMENT KIT	1					
2	90201–10M20	.WASHER, PLATE	2					
3	90185–09M01	.NUT, SELF-LOCKING	2					
4	90170–09M03	.NUT	1					
5	90387–10M42	.COLLAR	1					
6	90101–09M01	.BOLT	1					
7	90201–10081	.WASHER, PLATE	1					
8	6E5–43145–01	.CAP, CLAMP BRACKET	1					
9	93210–16275	.O-RING	1					

Part No.	Applicable model
6EK-61350-00	F75D(F75B), F75F, F80D, F90C(F90B), VF90A, F100F, F100G F115B(F115B), VF115A, F130A(F130A)

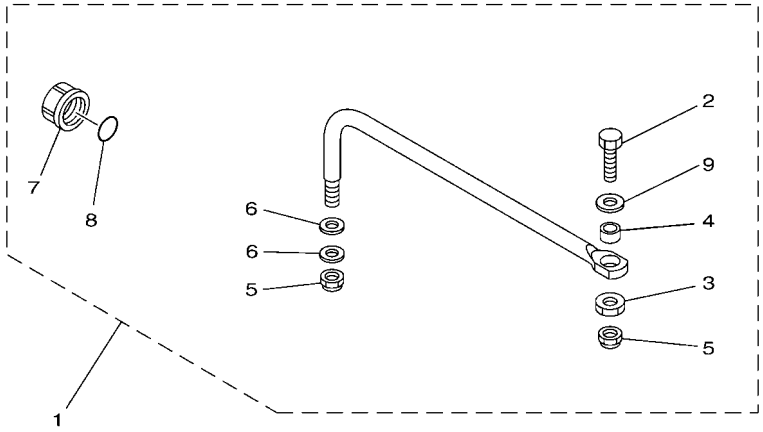

601R10R-U680

FIG. 67 STEERING GUIDE 10

REF. NO.	PART NO.	DESCRIPTION	601R					REMARKS
1	6EK–61350–00	STEERING GUIDE ATTACHMENT KIT	1					
2	6E5–61355–00	.BOLT	1					
3	90170–09M03	.NUT	1					
4	90387–10M42	.COLLAR	1					
5	90185–09M01	.NUT, SELF-LOCKING	2					
6	90201–10M20	.WASHER, PLATE	2					
7	6E5–43145–01	.CAP, CLAMP BRACKET	1					
8	93210–16275	.O-RING	1					
9	90201–10081	.WASHER, PLATE	1					

Part No.	Applicable model
6FM-61350-00	F20G(F20B), F25G(F25C,T25C)

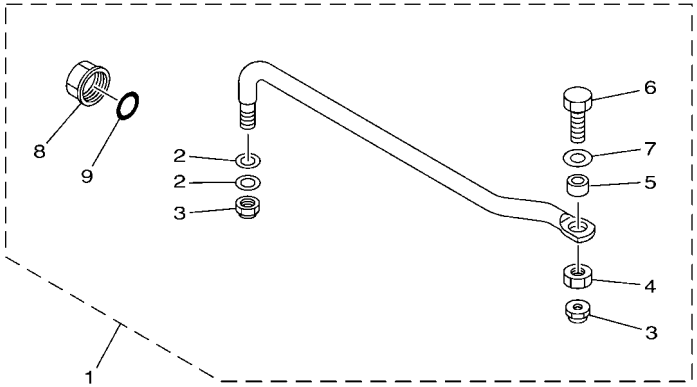

601R10R-U690

FIG. 68 STEERING GUIDE 11

REF. NO.	PART NO.	DESCRIPTION	601R					REMARKS
1	6FM–61350–00	STEERING GUIDE ATTACHMENT KIT	1					
2	90201–10M20	.WASHER, PLATE	2					
3	90185–09M01	.NUT, SELF-LOCKING	2					
4	90170–09M03	.NUT	1					
5	90387–10M42	.COLLAR	1					
6	90101–09M01	.BOLT	1					
7	90201–10081	.WASHER, PLATE	1					
8	6E5–43145–01	.CAP, CLAMP BRACKET	1					
9	93210–16275	.O-RING	1					

PART NO.	REF. NO.
6FM–14571–00	54 – 17
6BL–14571–10	53 – 25
65W–26326–11	50 – 10
6BL–41211–00	53 – 24
682–41237–00	49 – 3
6H4–41237–00	54 – 9
682–41237–50	54 – 8
682–41238–01	49 – 2
6J8–41262–00	53 – 22
65W–41283–00	53 – 21
6FM–41283–00	54 – 12
6BL–41638–00	53 – 19
656–42153–10–8D	49 – 6
63V–42154–00	48 – 10
6FM–42157–00	54 – 11
69S–42157–10	49 – 5
63V–42192–00	48 – 14
6X9–42697–00	13 – 6
	14 – 7
	15 – 9
6AH–42724–11	52 – 2
68T–42725–11	51 – 16
6DR–42725–11	51 – 15
66T–42725–31	50 – 9
65W–42726–11	50 – 11
	52 – 4
	53 – 4
6FM–42726–11	54 – 4
6BL–42727–01	53 – 3
6BL–42761–00	53 – 2
6DR–42761–10	51 – 14
6FM–42761–10	54 – 2
6X4–42821–00	11 – 53
6X9–42821–00	15 – 8
6E5–43145–01	58 – 8
	59 – 8
	60 – 9
	61 – 9
	62 – 9
	63 – 9
	64 – 8
	66 – 8
	67 – 7
	68 – 8
6AU–44111–10	51 – 7
6BL–44125–00	53 – 9
6FM–44125–00	54 – 5
66T–44125–01	50 – 6

PART NO.	REF. NO.
703–44189–20	4 – 36
	5 – 36
	6 – 36
703–44189–30	4 – 42
	5 – 42
	6 – 41
6X3–44191–00	4 – 47
	5 – 47
	6 – 46
	9 – 74
	10 – 70
6BL–44192–00	53 – 13
6FM–44192–00	54 – 6
6AH–44194–00	56 – 4
6X0–48111–00	10 – 57
6X3–48111–00	9 – 59
6X0–48116–00	9 – 73
	10 – 69
6X9–48119–00	14 – 8
6X5–48119–01	11 – 61
6X5–48119–11	11 – 60
704–48119–50	7 – 11
704–48119–60	8 – 11
6X9–4811C–00	13 – 7
6X0–48121–00	9 – 38
	10 – 38
6X0–48127–00	9 – 54
6X5–48127–00	11 – 34
6X9–48127–00	13 – 3
	14 – 3
EL8–48127–00	7 – 24
	8 – 24
	9 – 24
	10 – 24
6X5–48127–10	11 – 39
6X5–48127–20	11 – 41
6X0–48128–00	9 – 65
	10 – 63
703–48128–00	11 – 35
704–48128–00	8 – 64
703–48128–10	4 – 39
	5 – 39
	6 – 39
6X0–48129–00	10 – 66
6X3–48129–00	9 – 68
6X5–48129–00	11 – 36
703–48129–00	4 – 41
	5 – 41

PART NO.	REF. NO.
703–48129–00	9 – 16
	10 – 16
	11 – 42
704–48129–11	7 – 2
	8 – 2
704–48129–60	8 – 69
6X0–48138–00	9 – 5
	10 – 5
703–48138–00	6 – 47
6X5–48144–00	11 – 29
6X5–48144–10	11 – 28
704–48144–10	7 – 53
704–48144–20	8 – 53
6X5–48152–00	11 – 6
703–48152–10	4 – 6
	5 – 6
	6 – 6
6X0–48153–00	9 – 48
	10 – 48
703–48153–00	4 – 61
	5 – 61
	6 – 53
	11 – 22
704–48153–00	7 – 58
	8 – 58
6X0–48155–00	9 – 61
	10 – 59
6X0–48156–00	9 – 66
	10 – 64
	11 – 44
	15 – 7
704–48156–00	8 – 65
EL8–48158–00	9 – 31
	10 – 31
EL8–48164–00	7 – 42
	8 – 42
	9 – 39
	10 – 39
6X9–48166–00	15 – 2
704–48166–00	7 – 59
	8 – 70
6X9–48167–00	13 – 8
	14 – 9
704–48167–20	7 – 62
704–48167–30	8 – 72
6X9–48168–00	14 – 10
6X5–48175–00	11 – 71
6X5–48176–00	11 – 65

PART NO.	REF. NO.
6X9–48176–00	13 – 9
	14 – 11
704–48176–00	7 – 54
704–48176–10	8 – 54
704–48178–00	8 – 71
	9 – 35
	10 – 35
704–48178–10	7 – 61
6X0–48187–00	9 – 12
	10 – 12
703–48189–00	4 – 19
	5 – 19
	6 – 19
	11 – 19
EL8–48191–00	7 – 17
	8 – 17
	9 – 20
	10 – 20
703–48192–00	9 – 45
	10 – 45
704–48192–00	7 – 46
	8 – 46
704–48192–P0	7 – 55
	8 – 55
6X0–48193–00	9 – 64
	10 – 62
704–48193–00	9 – 43
	10 – 43
703–48198–00	4 – 16
	5 – 16
	6 – 16
	11 – 16
703–48201–22	1 – 1
	5 – 1
703–48201–B2	1 – 1
	5 – 1
703–48203–22	1 – 1
	5 – 1
703–48205–23	1 – 1
	5 – 1
703–48205–B3	1 – 1
	5 – 1
704–48205–R1	2 – 1
	7 – 1
6X3–48206–11	3 – 1
	9 – 1
703–48206–21	1 – 2
	6 – 1

PART NO.	REF. NO.
6X3–48206–22	3 – 2
	10 – 1
704–48206–R1	2 – 1
	7 – 1
6X5–48207–03	3 – 3
	11 – 1
703–48207–23	1 – 1
	5 – 1
704–48207–R1	2 – 2
	8 – 1
703–48210–22	1 – 1
	4 – 1
6X0–48211–00	9 – 26
	10 – 26
6X9–48211–00	16 – 8
	17 – 8
	18 – 10
	19 – 12
	20 – 9
703–48211–10	4 – 25
	5 – 25
	6 – 25
EL8–48212–00	9 – 2
	10 – 2
703–48212–10	4 – 26
	5 – 26
	6 – 26
6X5–48213–00	11 – 58
EL8–48213–00	9 – 75
	10 – 71
703–48213–10	4 – 27
	5 – 27
	6 – 27
6X5–48214–00	11 – 63
6X5–48214–10	11 – 64
6X5–48215–00	11 – 80
6X5–48215–10	11 – 81
703–48215–11	4 – 46
	5 – 46
	6 – 45
704–48215–60	7 – 13
704–48215–70	8 – 13
6X5–48219–00	11 – 67
703–48219–10	4 – 34
	5 – 34
	6 – 34
704–48219–R0	7 – 52
	8 – 52

PART NO.	REF. NO.
6X9–4821A–00	17 – 9
	18 – 11
	19 – 13
6X5–48221–00	11 – 26
6X3–48221–10	9 – 56
6X5–48221–10	11 – 27
703–48221–10	4 – 28
	5 – 28
	6 – 28
6X3–48221–20	10 – 55
704–48221–R0	7 – 43
	8 – 43
6X9–48222–00	14 – 5
6X5–48222–01	11 – 31
6X3–48222–10	9 – 49
704–48222–10	7 – 33
6X5–48222–11	11 – 33
6X3–48222–20	10 – 49
703–48222–20	4 – 31
	5 – 31
704–48222–20	8 – 62
6X5–48222–21	11 – 66
6X5–48222–30	11 – 85
703–48222–30	4 – 31
	5 – 31
	6 – 31
704–48222–30	8 – 33
6X0–48223–00	9 – 55
6X3–48223–10	10 – 54
703–48223–10	4 – 32
	5 – 32
	6 – 32
6X5–48224–00	11 – 13
704–48224–R0	7 – 49
	8 – 49
6X0–48225–00	10 – 56
6X3–48225–00	9 – 58
6X5–48225–00	11 – 68
6X3–48225–10	9 – 57
703–48225–10	4 – 33
	5 – 33
	6 – 33
6X3–48225–30	9 – 60
	10 – 58
704–48225–R0	7 – 45
	8 – 45
703–48227–00	4 – 30
	5 – 30

PART NO.	REF. NO.
703–48227–00	6 – 30
	9 – 50
	10 – 50
6X5–48228–00	11 – 73
6X5–48229–01	11 – 30
6X5–48229–11	11 – 32
704–48229–20	8 – 60
704–48229–30	7 – 36
	8 – 36
6X9–4822A–00	13 – 2
6X9–4822B–00	14 – 2
703–48230–22	1 – 1
	4 – 1
704–48231–00	7 – 26
	8 – 26
EL8–48231–00	9 – 27
	10 – 27
6X5–48232–00	11 – 2
703–48232–00	4 – 2
	5 – 2
	6 – 2
704–48232–P1	7 – 41
	8 – 41
704–48233–00	7 – 56
	8 – 56
EL8–48233–00	9 – 46
	10 – 46
703–48234–00	4 – 20
	5 – 20
	6 – 20
	11 – 20
704–48234–00	7 – 51
	8 – 51
EL8–48234–00	9 – 44
	10 – 44
702–48235–00	9 – 47
	10 – 47
703–48235–00	4 – 5
	5 – 5
	6 – 5
	11 – 5
704–48235–00	7 – 57
	8 – 57
703–48236–00	4 – 18
	5 – 18
	6 – 18
	11 – 18
703–48238–00	4 – 24

PART NO.	REF. NO.
703–48238–00	5 – 24
	6 – 24
	11 – 24
704–48238–00	7 – 40
	8 – 40
	9 – 37
	10 – 37
6X9–4823B–00	15 – 4
EL8–48241–00	7 – 27
	8 – 27
	9 – 28
	10 – 28
704–48242–10	7 – 44
	8 – 44
EL8–48242–10	9 – 40
	10 – 40
703–48243–00	4 – 17
	5 – 17
	6 – 17
	11 – 17
703–48244–00	4 – 23
	5 – 23
	6 – 23
	11 – 23
EL8–48244–00	7 – 31
	8 – 30
	9 – 33
	10 – 33
6X3–48245–00	10 – 72
703–48245–00	4 – 13
	5 – 13
	6 – 13
EL8–48245–00	7 – 32
	8 – 31
	9 – 34
	10 – 34
6X5–48246–00	11 – 62
701–48246–00	7 – 5
	8 – 5
703–48246–00	4 – 29
	5 – 29
	6 – 29
	11 – 74
701–48248–00	4 – 15
	5 – 15
	6 – 15
	7 – 39
	8 – 39

PART NO.	REF. NO.
701–48248–00	9 – 36
	10 – 36
	11 – 15
703–48250–23	1 – 1
	4 – 1
EL8–48251–00	7 – 3
	8 – 3
	9 – 3
	10 – 3
703–48252–00	4 – 14
	5 – 14
	6 – 14
	11 – 14
6X3–48254–00	10 – 53
EL8–48254–00	7 – 28
	8 – 28
	9 – 29
	10 – 29
EL8–48259–00	7 – 7
	8 – 7
	9 – 8
	10 – 8
703–48260–21	1 – 2
	6 – 1
6X0–48261–00	9 – 19
	10 – 19
6X5–48261–00	11 – 4
704–48261–00	7 – 16
	8 – 16
703–48261–01	5 – 4
	6 – 4
703–48261–11	4 – 4
	6 – 4
6X0–48262–00	9 – 10
	10 – 10
704–48262–00	7 – 8
	8 – 8
702–48263–00	9 – 41
	10 – 41
6X0–48264–00	9 – 11
	10 – 11
6X5–48264–00	11 – 8
703–48264–00	4 – 8
	5 – 8
	6 – 8
704–48264–00	7 – 9
	8 – 9
6X0–48265–00	9 – 9

PART NO.	REF. NO.
6X0–48265–00	10 – 9
6X5–48265–00	11 – 11
703–48265–00	6 – 11
704–48265–00	7 – 4
	8 – 4
703–48265–10	4 – 11
	5 – 11
704–48266–00	9 – 14
	10 – 14
6X5–48267–00	11 – 43
	11 – 83
703–48268–00	4 – 7
	5 – 7
	6 – 7
	11 – 7
6X5–48271–00	11 – 3
703–48271–00	4 – 3
	5 – 3
	6 – 3
704–48271–00	7 – 23
	8 – 23
EL8–48271–00	9 – 23
	10 – 23
703–48272–23	1 – 1
	4 – 1
EL8–48279–00	7 – 50
	8 – 50
	9 – 42
	10 – 42
6X0–48281–00	9 – 63
	10 – 61
703–48281–00	4 – 35
	5 – 35
	6 – 35
704–48281–00	7 – 14
	8 – 14
	9 – 71
	10 – 67
EL8–48281–00	7 – 12
	8 – 12
	9 – 17
	10 – 17
704–48283–00	7 – 18
	8 – 18
703–48284–00	4 – 58
	5 – 58
703–48284–10	4 – 58
	5 – 58

PART NO.	REF. NO.
703–48284–20	6 – 50
704–48284–P0	7 – 60
	8 – 67
704–48285–20	8 – 68
701–48287–00	4 – 45
	5 – 45
	6 – 44
	9 – 67
	10 – 65
	15 – 6
704–48287–00	7 – 21
	8 – 21
	11 – 46
	13 – 11
	14 – 13
6X0–48288–00	9 – 53
703–48290–01	1 – 3
703–48293–10	4 – 44
	5 – 44
	6 – 43
704–48293–40	2 – 3
704–48293–50	2 – 6
701–48310–10	12 – 1
701–48310–20	12 – 1
701–48310–40	12 – 1
701–48310–60	12 – 1
701–48310–80	12 – 1
701–48310–90	12 – 1
6X5–48317–00	11 – 76
6X5–48317–10	11 – 77
701–48320–00	12 – 1
701–48320–20	12 – 1
701–48320–30	12 – 1
701–48320–40	12 – 1
701–48320–50	12 – 1
701–48320–60	12 – 1
701–48320–70	12 – 1
701–48320–80	12 – 1
701–48320–90	12 – 1
647–48330–50	47 – 8
648–48330–50	49 – 21
617–48331–91	47 – 12
	49 – 22
6X5–48338–00	11 – 78
6X5–48338–10	11 – 79
647–48340–50	47 – 14
648–48340–50	49 – 15
6FM–48344–00	48 – 7

PART NO.	REF. NO.
6FM–48344–00	50 – 2
	51 – 10
	51 – 12
	52 – 12
	53 – 17
	53 – 29
	54 – 18
703–48345–01	4 – 21
	5 – 21
	6 – 21
	7 – 20
	8 – 20
	9 – 22
	10 – 22
	11 – 21
647–48346–50	47 – 15
648–48346–50	49 – 23
617–48346–90	47 – 9
	49 – 17
701–48350–00	12 – 1
701–48350–10	12 – 1
701–48350–20	12 – 1
701–48350–30	12 – 1
701–48350–40	12 – 1
701–48350–50	12 – 1
701–48350–60	12 – 1
701–48350–70	12 – 1
6X5–48351–00	11 – 54
6X5–48354–00	11 – 59
6X5–48358–00	11 – 25
703–48358–01	4 – 22
	5 – 22
	6 – 22
	7 – 25
	8 – 25
	9 – 25
	10 – 25
617–48361–91	47 – 18
	49 – 16
6X9–48400–00	13 – 5
	14 – 6
63V–48501–00	48 – 1
66T–48501–02	50 – 1
69R–48501–02	49 – 1
6AH–48501–02	52 – 1
6BL–48501–02	53 – 1
6FM–48501–02	54 – 1
655–48501–03	47 – 1

PART NO.	REF. NO.
6DR–48501–03	51 – 1
655–48501–11	47 – 1
69R–48501–12	49 – 1
700–48510–12	47 – 20
	49 – 27
	57 – 9
63D–48511–01	55 – 6
63V–48511–01	55 – 8
65W–48511–01	50 – 7
	53 – 7
	56 – 5
68V–48511–01	56 – 6
6AH–48511–01	56 – 1
676–48511–02	55 – 1
688–48511–02	56 – 9
689–48511–02	49 – 28
	57 – 5
676–48511–10	47 – 21
	57 – 1
69G–48511–10	57 – 10
688–48511–12	55 – 7
63V–48531–00	48 – 2
6AH–48531–00	52 – 14
68T–48531–01	51 – 2
655–48531–51	47 – 2
689–48531–51	49 – 13
6AH–48532–00	52 – 7
689–48532–51	49 – 11
63V–48534–00	48 – 17
647–48534–50	47 – 4
648–48534–50–8D	49 – 9
63D–48538–00	54 – 20
6BL–48538–00	53 – 8
6H3–48538–00	50 – 4
682–48538–50	48 – 3
	51 – 3
	52 – 9
63V–48544–00	48 – 19
6X9–48A00–00	15 – 1
	20 – 1
	23 – 1
6X9–48A01–01	13 – 1
	16 – 1
	21 – 1
6X9–48A02–01	14 – 1
	17 – 1
	18 – 1
	19 – 1

PART NO.	REF. NO.
6X9–48A02–01	22 – 1
6E5–61301–01	65 – 1
6E5–61303–00	65 – 5
6E5–61311–11	65 – 3
6E5–61313–00	65 – 2
6E5–61315–00	65 – 4
63D–61350–00	61 – 1
65W–61350–00	62 – 1
6AH–61350–00	59 – 1
6BG–61350–00	66 – 1
6EK–61350–00	67 – 1
6FM–61350–00	68 – 1
689–61350–02	60 – 1
6E5–61350–02	64 – 1
688–61350–10	63 – 1
68T–61350–10	58 – 1
63D–61351–00	61 – 2
65W–61351–00	62 – 2
689–61351–01	60 – 2
6E5–61351–01	64 – 2
688–61351–10	63 – 2
6E5–61355–00	58 – 6
	59 – 6
	60 – 7
	63 – 8
	64 – 5
	67 – 2
68V–81950–00	31 – 9
	34 – 12
704–81950–11	8 – 59
	11 – 72
6X3–81971–00	43 – 1
6X3–81971–10	43 – 2
6K1–81980–00	29 – 18
6X6–81980–00	32 – 9
	33 – 7
	35 – 9
	36 – 6
	39 – 12
	39 – 18
	40 – 6
	40 – 12
6X6–81980–10	37 – 6
6X6–81980–40	38 – 4
703–82119–01	54 – 23
688–82388–00	43 – 5
6X5–82507–00	34 – 11
6Y8–82507–00	31 – 10

PART NO.	REF. NO.
6X5–82510–02	34 – 2
6X6–82510–02	27 – 3
61B–82510–03	30 – 4
6Y8–82510–03	31 – 3
6R5–82510–04	25 – 4
64D–82510–05	41 – 4
6K1–82510–08	29 – 3
704–82510–0B	24 – 4
	26 – 2
	42 – 1
6X6–82510–11	32 – 3
703–82510–14	5 – 48
64D–82510–21	41 – 4
6X6–82510–21	35 – 3
703–82510–34	4 – 48
	5 – 48
6X6–82510–41	39 – 2
703–82510–45	4 – 48
	5 – 48
6X6–82511–09–A1	27 – 5
	32 – 5
	35 – 5
	39 – 3
6X6–82511–09–A2	27 – 5
	32 – 5
	35 – 5
	39 – 3
6X6–82511–09–A3	27 – 5
	32 – 5
	35 – 5
	39 – 3
6X6–82511–09–A4	27 – 5
	32 – 5
	35 – 5
	39 – 3
6X6–82511–09–A5	27 – 5
	32 – 5
	35 – 5
	39 – 3
6X6–82511–09–A6	27 – 5
	32 – 5
	35 – 5
	39 – 3
6X6–82511–09–A7	27 – 5
	32 – 5
	35 – 5
	39 – 3
6X6–82511–09–A8	27 – 5

PART NO.	REF. NO.
6X6–82511–09–A8	32 – 5
	35 – 5
	39 – 3
6X6–82511–09–A9	27 – 5
	32 – 5
	35 – 5
	39 – 3
703–82531–00	4 – 51
	5 – 51
6K1–82532–00	4 – 50
	5 – 50
	24 – 6
	26 – 4
	29 – 5
	41 – 6
	42 – 3
703–82532–00	5 – 50
	25 – 6
	27 – 4
	30 – 6
	31 – 5
	32 – 4
	34 – 4
	35 – 4
6X5–82540–00	11 – 47
703–82540–00	4 – 55
	5 – 55
704–82540–00	9 – 15
	10 – 15
704–82540–30	8 – 10
704–82540–40	7 – 10
704–82541–10	9 – 72
	10 – 68
682–82556–00	4 – 53
	5 – 53
	6 – 49
	9 – 70
	24 – 8
	25 – 8
	26 – 6
	27 – 7
	29 – 7
	30 – 8
	31 – 7
	32 – 7
	34 – 6
	35 – 7
	37 – 3

PART NO.	REF. NO.
682–82556–00	39 – 5
	40 – 14
	41 – 20
	42 – 11
	42 – 13
	43 – 3
6X3–82563–02	9 – 52
	10 – 52
6X5–82563–02	11 – 48
688–82563–10	43 – 4
6X5–82563–12	11 – 49
703–82563–21	4 – 57
	5 – 57
6X5–82563–22	11 – 50
703–82563–31	4 – 57
	5 – 57
6X5–82563–32	11 – 51
704–82563–60	7 – 35
704–82563–70	8 – 35
704–82563–80	8 – 61
704–82563–90	8 – 66
6ES–82570–00	40 – 13
6X5–82570–03	34 – 1
6Y8–82570–05	31 – 1
64D–82570–06	41 – 1
61B–82570–07	30 – 1
6R5–82570–0A	25 – 1
64D–82570–11	41 – 16
704–82570–13	24 – 1
6K1–82570–14	29 – 1
64D–82570–23	41 – 1
64D–82570–31	41 – 16
6X6–82570–34	27 – 1
6X6–82570–41	32 – 1
6X6–82570–51	35 – 1
6X6–82570–60	32 – 10
6X6–82570–70	35 – 10
6X6–82570–80	28 – 1
6X6–82570–90	37 – 1
6X6–82570–B0	37 – 4
6X6–82570–D0	38 – 1
6X6–82570–E0	33 – 1
6X6–82570–F0	36 – 1
6X6–82570–G1	39 – 1
6X6–82570–J0	39 – 7
	40 – 1
6X6–82570–K0	39 – 13
	40 – 7

PART NO.	REF. NO.
6X6–82570–L0	40 – 15
64D–82571–00	41 – 2
6X5–82571–00	34 – 7
6X6–82571–00	27 – 2
6Y8–82571–01	31 – 2
6K1–82571–02	29 – 2
	30 – 2
704–82571–02	24 – 2
	25 – 2
64D–82571–10	41 – 17
6X6–82571–10	32 – 2
	35 – 2
6X6–82571–20	32 – 11
	33 – 2
6X6–82571–30	35 – 11
	36 – 2
6X6–82571–40	28 – 2
6X6–82571–50	37 – 2
6X6–82571–60	38 – 2
6X6–82571–70	37 – 5
	40 – 16
6X6–82571–80	39 – 9
	40 – 3
6X6–82571–90	39 – 15
	40 – 9
6X5–82575–00	34 – 5
64D–82575–01	41 – 19
6K1–82575–01	29 – 6
	30 – 7
	31 – 6
6X3–82575–01	9 – 69
6X7–82575–01	15 – 3
688–82575–02	4 – 52
	5 – 52
	24 – 7
	25 – 7
	26 – 5
6ES–82575–10	39 – 4
6X6–82575–10	32 – 6
	35 – 6
64D–82575–11	41 – 19
	42 – 12
688–82575–12	27 – 6
	42 – 10
701–82575–53	6 – 48
703–82577–00	4 – 49
	5 – 49
	24 – 5

PART NO.	REF. NO.
703–82577–00	26 – 3
	29 – 4
	41 – 5
	42 – 2
676–82577–01	5 – 49
	25 – 5
	30 – 5
	31 – 4
	34 – 3
6X3–8257B–02	42 – 4
704–8257C–04	26 – 1
6X9–82580–02	16 – 2
6X9–82580–10	21 – 2
6X9–82580–21	20 – 2
6X9–82580–30	23 – 2
6X9–82580–42	17 – 2
	18 – 2
	19 – 2
6X9–82580–50	22 – 2
6X9–82580–C2	18 – 7
	19 – 7
6X9–82580–D2	19 – 9
64D–82581–00	24 – 9
	25 – 9
	26 – 7
	31 – 11
	41 – 7
	42 – 5
6X5–82581–00	34 – 9
6FM–82582–00	54 – 24
6X9–82582–00	16 – 5
	17 – 4
	18 – 4
	19 – 4
	20 – 5
68V–82582–10	16 – 4
	17 – 3
	18 – 3
	19 – 3
	20 – 4
6X9–82582–10	17 – 5
	18 – 5
	19 – 5
6Y8–82582–11	16 – 6
	17 – 6
	18 – 6
	18 – 8
	19 – 6

PART NO.	REF. NO.
6Y8–82582–11	19 – 8
	19 – 10
	20 – 7
6X9–82582–60	20 – 6
6X9–82582–70	23 – 3
6X9–82582–80	23 – 4
688–82586–11	44 – 4
688–82586–21	4 – 54
	5 – 54
688–82586–31	44 – 4
688–82586–50	44 – 1
64D–82588–00	41 – 3
61B–82588–01	30 – 3
6R5–82588–01	24 – 3
	25 – 3
64D–82588–10	41 – 18
6X9–8258A–00	45 – 6
703–8258A–00	44 – 3
61B–8258A–01	44 – 2
6X6–8258A–01	45 – 1
	45 – 1
	45 – 1
	45 – 1
	45 – 1
688–8258A–10	44 – 5
6X9–8258A–10	45 – 6
6X6–8258A–11	45 – 1
	45 – 1
	45 – 1
	45 – 1
688–8258A–20	4 – 54
	5 – 54
6X9–8258A–20	45 – 6
6X6–8258A–21	45 – 1
	45 – 1
	45 – 1
	45 – 1
688–8258A–30	44 – 5
6X9–8258A–30	45 – 8
6X6–8258A–31	45 – 1
	45 – 1
	45 – 1
	45 – 1
6K1–8258A–40	44 – 2
6X9–8258A–40	45 – 8
6X6–8258A–41	45 – 1
	45 – 1
	45 – 1
	45 – 1

PART NO.	REF. NO.
688–8258A–50	44 – 2
6X9–8258A–50	45 – 8
6X6–8258A–51	45 – 2
	45 – 2
	45 – 2
	45 – 2
688–8258A–60	44 – 2
6X9–8258A–60	45 – 9
6X6–8258A–61	45 – 2
	45 – 2
	45 – 2
	45 – 2
688–8258A–70	44 – 2
6X9–8258A–70	45 – 9
6X6–8258A–71	45 – 2
	45 – 2
	45 – 2
	45 – 2
6X9–8258A–80	45 – 9
6X6–8258A–81	45 – 2
	45 – 2
	45 – 2
	45 – 2
6X6–8258A–B1	45 – 4
	45 – 4
	45 – 4
6X6–8258A–D1	45 – 4
	45 – 4
	45 – 4
6X6–8258A–F1	45 – 4
	45 – 4
	45 – 4
6X6–8258A–G1	45 – 3
	45 – 3
	45 – 3
	45 – 3
6X6–8258A–H1	45 – 3
	45 – 3
	45 – 3
	45 – 3
6X6–8258A–J1	45 – 3
	45 – 3
	45 – 3
	45 – 3
6X6–8258A–M0	46 – 1
6X6–8258A–N0	46 – 2
6X6–8258A–P0	46 – 3
6X6–8258A–R0	45 – 5

PART NO.	REF. NO.
6X6–8258A–S0	45 – 5
6X6–8258A–T0	45 – 5
6GR–8258A–V0	45 – 12
6X5–82590–00	11 – 82
704–82590–10	8 – 63
703–82591–00	4 – 59
	5 – 59
	6 – 51
	11 – 52
703–82592–00	4 – 60
	5 – 60
	6 – 52
704–82594–00	7 – 34
	8 – 34
6X6–8259E–20	28 – 3
	32 – 13
	33 – 4
	35 – 12
	36 – 3
	38 – 3
	39 – 8
	39 – 14
	40 – 2
	40 – 8
6X6–82716–00	32 – 14
6X6–82716–10	35 – 13
6X6–82716–20	28 – 5
6X6–82716–40	33 – 6
	39 – 11
	39 – 17
	40 – 5
	40 – 11
6X6–82716–50	36 – 5
6R5–83383–00	25 – 13
	30 – 13
	31 – 8
	42 – 9
6X4–83383–00	34 – 10
6X5–83383–00	34 – 8
703–83383–11	4 – 56
	5 – 56
688–83383–12	24 – 13
	26 – 11
	29 – 12
	41 – 11
703–83383–A0	27 – 8
	28 – 4
	32 – 8

PART NO.	REF. NO.
703–83383–A0	33 – 5
	35 – 8
	36 – 4
	39 – 6
	39 – 10
	39 – 16
	40 – 4
	40 – 10
6X9–83553–40	45 – 11
6X9–83553–60	45 – 10
6K1–83614–01	29 – 8
	30 – 9
6X6–83720–00	32 – 12
	33 – 3
6AH–83773–00	52 – 5
6D5–84340–00	54 – 21
6D5–84340–01	52 – 17
	53 – 31
6Y8–85371–01	16 – 3
	17 – 12
	18 – 14
	19 – 16
	20 – 3
	45 – 7
6X6–85590–41	16 – 7
	17 – 7
	18 – 9
	19 – 11
	20 – 8
61B–85830–02	30 – 14
6K1–85830–03	29 – 13
90101–09M01	61 – 7
	62 – 7
	66 – 6
	68 – 6
90101–09M70	65 – 9
90109–06316	54 – 3
90109–06M86	52 – 15
90116–10062	56 – 7
90116–10063	56 – 10
90149–05M05	24 – 14
	25 – 14
	29 – 19
	30 – 19
	41 – 12
	41 – 21
90159–05M25	48 – 20
90167–06M00	16 – 11

PART NO.	REF. NO.
90167–06M00	17 – 14
	18 – 16
	19 – 18
	20 – 12
90170–09M03	58 – 4
	59 – 4
	60 – 5
	61 – 5
	62 – 5
	63 – 5
	66 – 4
	67 – 3
	68 – 4
90170–09M05	65 – 10
90170–14M06	65 – 6
90185–08057	55 – 10
	56 – 3
	57 – 12
90185–09M01	58 – 3
	59 – 3
	60 – 4
	61 – 4
	62 – 4
	63 – 4
	64 – 6
	65 – 11
	66 – 3
	67 – 5
	68 – 3
90185–10027	47 – 24
	49 – 31
	53 – 6
	56 – 8
	56 – 11
	57 – 4
	57 – 8
90201–04M06	48 – 15
90201–05M06	53 – 14
90201–06M30	16 – 14
	17 – 17
	18 – 19
	19 – 21
	20 – 15
90201–06M31	53 – 11
	53 – 26
90201–06M62	54 – 14
90201–08M12	48 – 9
90201–10081	58 – 7

PART NO.	REF. NO.
90201–10081	59 – 7
	60 – 8
	61 – 8
	62 – 8
	63 – 7
	66 – 7
	67 – 9
	68 – 7
90201–10120	50 – 8
90201–10M02	48 – 13
90201–10M20	58 – 2
	59 – 2
	60 – 3
	61 – 3
	62 – 3
	63 – 3
	64 – 7
	66 – 2
	67 – 6
	68 – 2
90201–10M76	65 – 8
90206–10M04	48 – 12
90254–03M05	50 – 5
90386–10009	48 – 21
	49 – 7
90386–10025	48 – 11
90387–06139	53 – 23
90387–06M59	54 – 13
90387–06M86	53 – 10
90387–10M42	58 – 5
	59 – 5
	60 – 6
	61 – 6
	62 – 6
	63 – 6
	66 – 5
	67 – 4
	68 – 5
90387–10M61	64 – 3
90446–09M42	53 – 32
	54 – 22
90465–11M10	52 – 3
90465–13M11	16 – 10
	17 – 11
	18 – 13
	19 – 15
	20 – 11
90465–13M18	52 – 16

PART NO.	REF. NO.
90468–10005	53 – 15
90468–18001	53 – 16
90468–18008	48 – 8
	50 – 3
	51 – 11
	51 – 13
	52 – 13
	53 – 18
	53 – 30
	54 – 7
	54 – 19
90480–19031	52 – 8
90501–10071	47 – 11
	49 – 25
90501–10264	47 – 17
	49 – 19
90508–20040	53 – 20
90560–12M01	64 – 4
91490–20010	48 – 16
91690–30012	47 – 13
	47 – 19
	48 – 4
	49 – 18
	49 – 24
	51 – 4
	52 – 10
91690–40018	49 – 8
92780–06020	7 – 29
	8 – 29
	9 – 30
	10 – 30
92903–05100	24 – 11
	25 – 11
	25 – 16
	26 – 9
	31 – 13
	41 – 9
	42 – 7
92903–05600	25 – 17
92990–05100	24 – 16
	29 – 10
	29 – 21
	30 – 11
	30 – 21
	41 – 14
	41 – 23
92990–05200	11 – 84
92990–05300	7 – 37

PART NO.	REF. NO.
92990–05300	8 – 37
	9 – 62
	10 – 60
	11 – 70
	13 – 4
	14 – 4
92990–05600	24 – 17
	29 – 22
	30 – 22
	41 – 15
	41 – 24
92990–06100	29 – 16
	30 – 17
92990–06300	7 – 48
	8 – 48
92990–06600	29 – 17
	30 – 18
92990–08200	11 – 38
92990–08600	4 – 38
	5 – 38
	6 – 38
	11 – 69
	47 – 10
	47 – 16
	49 – 20
	49 – 26
92990–10100	55 – 3
92990–10600	9 – 7
	10 – 7
	47 – 23
	55 – 4
	57 – 3
	57 – 7
92995–10600	49 – 30
93210–12327	51 – 8
93210–16275	58 – 9
	59 – 9
	60 – 10
	61 – 10
	62 – 10
	63 – 10
	64 – 9
	66 – 9
	67 – 8
	68 – 9
93430–06024	4 – 12
	5 – 12
	6 – 12

PART NO.	REF. NO.
93430–06024	7 – 6
	8 – 6
	9 – 6
	10 – 6
	11 – 12
93700–06M03	53 – 5
95303–05600	25 – 15
95303–05700	24 – 12
	25 – 12
	26 – 10
	31 – 14
	41 – 10
	42 – 8
95380–05600	4 – 9
	5 – 9
	6 – 9
	7 – 22
	8 – 22
	11 – 9
	13 – 12
	14 – 14
	24 – 15
	29 – 11
	29 – 20
	30 – 12
	30 – 20
	41 – 13
	41 – 22
	49 – 4
95380–05700	54 – 10
95380–06600	4 – 43
	5 – 43
	6 – 42
	7 – 38
	8 – 38
	9 – 13
	10 – 13
	11 – 75
	29 – 15
	30 – 16
	47 – 7
	48 – 6
	51 – 6
95380–10600	55 – 5
95380–14700	65 – 7
95780–06300	16 – 13
	17 – 16
	18 – 18

PART NO.	REF. NO.
95780–06300	19 – 20
	20 – 14
95780–08300	48 – 18
95D95–06016	54 – 16
95D95–06045	54 – 15
97003–05012	31 – 12
97303–05012	24 – 10
	25 – 10
	26 – 8
	41 – 8
	42 – 6
97380–05025	4 – 10
	5 – 10
	6 – 10
	11 – 10
97380–06018	7 – 19
	8 – 19
	9 – 21
	10 – 21
97380–08030	4 – 37
	5 – 37
	6 – 37
	11 – 37
97595–05516	51 – 9
97595–05520	47 – 5
97595–06512	49 – 10
97595–06516	48 – 5
97607–05212	16 – 9
	17 – 10
	18 – 12
	19 – 14
	20 – 10
97780–05130	11 – 57
97780–06230	15 – 5
97780–40116	43 – 6
97780–50145	2 – 5
	2 – 8
	13 – 10
	14 – 12
97880–06035	16 – 12
	17 – 15
	18 – 17
	19 – 19
	20 – 13
97890–05016	7 – 63
	8 – 73
	9 – 4
	10 – 4

PART NO.	REF. NO.
97890–05025	7 – 15
	8 – 15
	9 – 18
	10 – 18
97890–06018	7 – 47
	8 – 47
97890–06035	9 – 65
	10 – 63
97D75–10040	47 – 22
	49 – 29
	55 – 2
	57 – 2
	57 – 6
97D95–06025	53 – 28
97D95–06045	47 – 6
97D95–06065	53 – 27
97E75–08535	55 – 9
	57 – 11
97E95–06512	51 – 5
97E95–06514	52 – 11
97E95–06516	49 – 12
	49 – 14
97E95–06518	47 – 3
97E95–06530	52 – 6
97E95–06535	53 – 12
97E95–08525	56 – 2
98507–06016	17 – 13
	18 – 15
	19 – 17
98580–04006	4 – 40
	5 – 40
	6 – 40
	9 – 32
	10 – 32
	11 – 40
98580–05008	9 – 51
	10 – 51
98580–05010	11 – 55
98580–05012	11 – 56
	11 – 86
98580–05040	11 – 57
98580–05060	2 – 4
	2 – 7
	13 – 10
	14 – 12
98780–04010	11 – 45
98780–05018	7 – 30
	8 – 32

PART NO.	REF. NO.	PART NO.	REF. NO.	PART NO.	REF. NO.	PART NO.	REF. NO.	PART NO.	REF. NO.	PART NO.	REF. NO.
98780–06035	15 – 5										
98980–05010	29 – 9										
	30 – 10										
98980–06020	29 – 14										
	30 – 15										